

Structural Concrete

Textbook on Behaviour, Design and Performance

Updated knowledge of the CEB/FIP Model Code 1990

Volume 2

Basis of design

July 1999

Subject to priorities defined by the Steering Committee and the Praesidium, the results of *fib*'s work in Commissions and Task Groups are published in a continuously numbered series of technical publications called 'Bulletins'. The following categories are used:

category	minimum approval procedure required prior to publication
Technical Report	approved by a Task Group and the Chairpersons of the Commission
State-of-Art report	approved by a Commission
Manual or Guide (to good practice)	approved by the Steering Committee of *fib* or its Publication Board
Recommendation	approved by the Council of *fib*
Model Code	approved by the General Assembly of *fib*

Any publication not having met the above requirements will be clearly identified as preliminary draft.

This **Bulletin N° 2** has been approved as a *fib* Manual by the Steering Committee in April 1999.

Structural Concrete, the Textbook on Behaviour, Design and Performance, is published in 3 volumes (*fib* Bulletins 1, 2, 3):

Volume 1 Chapter 1: Introduction
Chapter 2: Design process
Chapter 3: Materials

Volume 2 Chapter 4: Basis of design

Volume 3 Chapter 5: Durability
Chapter 6: Design for fire resistance
Chapter 7: Members design
Chapter 8: Assessment, maintenance and repair
Chapter 9: Practical aspects

Coverphoto : Bridge over the Salginatobel (Robert Maillart, 1930), photo courtesy institute MCS, EPFL

© fédération internationale du béton (*fib*), 1999

Although the International Federation for Structural Concrete *fib* - féderation internationale du béton - created from CEB and FIP, does its best to ensure that any information given is accurate, no liability or responsibility of any kind (including liability for negligence) is accepted in this respect by the organization, its members, servants or agents.

All rights reserved. No part of this publication may be reproduced, stored in a retrieval system, or transmitted in any form or by any means, electronic, mechanical, photocopying, recording, or otherwise, without prior written permission.

First published 1999 by the International Federation for Structural Concrete (*fib*)
This volume printed 2000 as 2nd edition (minor editorial corrections).
Post address: Case Postale 88, CH-1015 Lausanne, Switzerland
Street address: Federal Institute of Technology Lausanne - EPFL, Département Génie Civil
Tel (+41.21) 693 2747, Fax (+41.21) 693 5884, E-mail fib@epfl.ch, Telex 454 478 EPFL CH

ISSN 1562-3510
ISBN 2-88394-042-8

Printed by Sprint-Druck Stuttgart

The transverse steel needed is 683 mm^2/m in each wall and 1278 mm^2/m in the core. This can be provided by outer hoops (closed stirrups) ϕ12 $^c/_c$ 175 and inner stirrups ϕ12 $^c/_c$ 175.

In the bottom, the total requirement of longitudinal steel is for a force of 1778 kN for flexure and 534 kN for torsion plus 500 kN for the effect of shear in the core. The 2812 kN requires 6464 mm^2. 14ϕ25 give 6873 mm^2 thus leaving 205 mm^2 as a contribution to the longitudinal reinforcement of each side wall.

The remaining requirement for longitudinal steel in each side wall is for 1228 - 205 = 1023 mm^2, which will be provided by 3ϕ20, with an extra contribution from the corner top bars, similar to that from the bottom steel. These corner bars will be ϕ25 to satisfy the requirement $\phi \geq s_h/8$.

The actions in the top wall are a shear of 267 kN and a longitudinal compression of 1778 = 500 kN, the 500 kN being the tension for the core. The average stresses are then:

- longitudinal compression $\sigma = 1278 \times 10^3/600 \times 150 = 14.2$ MPa
- shear $\tau = 267 \times 10^3/450 \times 150 = 3.96$ MPa

The principal stresses are $\sqrt{3.96^2 + 7.1^2} \pm 7.1$, i.e. a compression of 15.2 MPa and a tension of 1.03 MPa. The compression is less than f_{cd1} and the tension is sufficiently low that the top would probably be uncracked.

The final detailing of the section is shown in Fig.4.4-36 a, while the actions involved are illustrated by part b) of the same figure.

(7) Plates and slabs

(7.1) Introduction

Plate systems include shear walls loaded in-plane, slabs loaded out of plane and folded plates and walls of bunkers, silos, etc., which are subjected to both in-plane and out-of-plane loading. They are commonly analysed by means such as the finite element method, which give distributions of stress resultants varying continuously over the areas, which it may be inappropriate to simplify to global strut and tie models. In such cases the ultimate limit state design is made at a local level by considering systems of concrete compression and steel tension which respect the stress limits of Section (3) above and comply with local requirements of equilibrium at a chosen number of points.

(7.2) Plates Loaded In-Plane

Fig.4.4-37 a shows a plate element of unit plan dimensions, subjected to normal (n_x,n_y) and shear (n_{xy}) forces per unit width. The normal forces are viewed as positive if tensile.

Fig.4.4-37 b shows the boundary forces corresponding to a uniaxial concrete compression (n_c per unit width) at an angle θ to the x-axis and Fig.4.4-37 c shows the boundary forces from the reinforcement (n_{sx} and n_{sy} per unit width).

For equilibrium between the applied actions of Fig.4.4-37 a and the internal ones of Figs.4.4-37 b and 4.4-37 c

$$n_{xy} = n_c \sin\theta\cos\theta \tag{4.4-77}$$

$$n_x = n_{sx} - n_c \cos^2\theta \tag{4.4-78}$$

$$n_y = n_{sy} - n_c \sin^2\theta \tag{4.4-79}$$

Eliminating n_c from these equations:

$$n_{sx} = n_x + n_{xy}\cot\theta \tag{4.4-80}$$

$$n_{sy} = n_y + n_{xy}\tan\theta \tag{4.4-81}$$

These expressions allow reinforcement to be designed for any chosen value of θ, subject to the condition

$$n_{xy} \geq f_{cd2} t \sin\theta\cos\theta \tag{4.4-82}$$

or

$$\frac{n_{xy}}{f_{cd2}t} \geq \frac{\cot\theta}{1+\cot^2\theta} \tag{4.4-83}$$

where

f_{cd2} is the design compression resistance of the cracked concrete, and
t is the thickness of the plate.

The minimum total amount of reinforcement is obtained with $\theta = 45°$ and $\tan\theta = \cot\theta = 1$, which also permits the highest possible value of n_{xy} ($= 0.5\, f_{cd2}t$).

It should be noted that no sign convention has been used explicitly for the shear n_{xy}. If the direction of the shear is changed from that of Fig.4.4-37 the effect is not to reduce the reinforcement required according to equations (4.4-80) and (4.4-81), but to change the direction of the compression in the concrete so that $\theta > 90°$ and both $\tan\theta$ and $\cot\theta$ are negative.

If the applied loading is such that n_{sx}, according to equation (4.4-80) is zero, then no x-direction steel, beyond minimum reinforcement, is required. This arises where n_x is a sufficiently large compression. With $n_{sx} = 0$

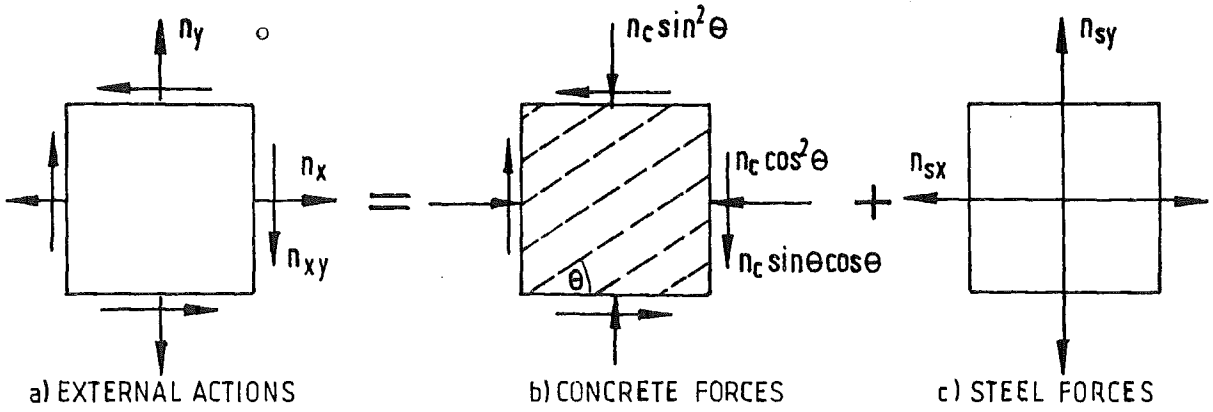

Fig.4.4-37: External and internal actions on a unit plate element

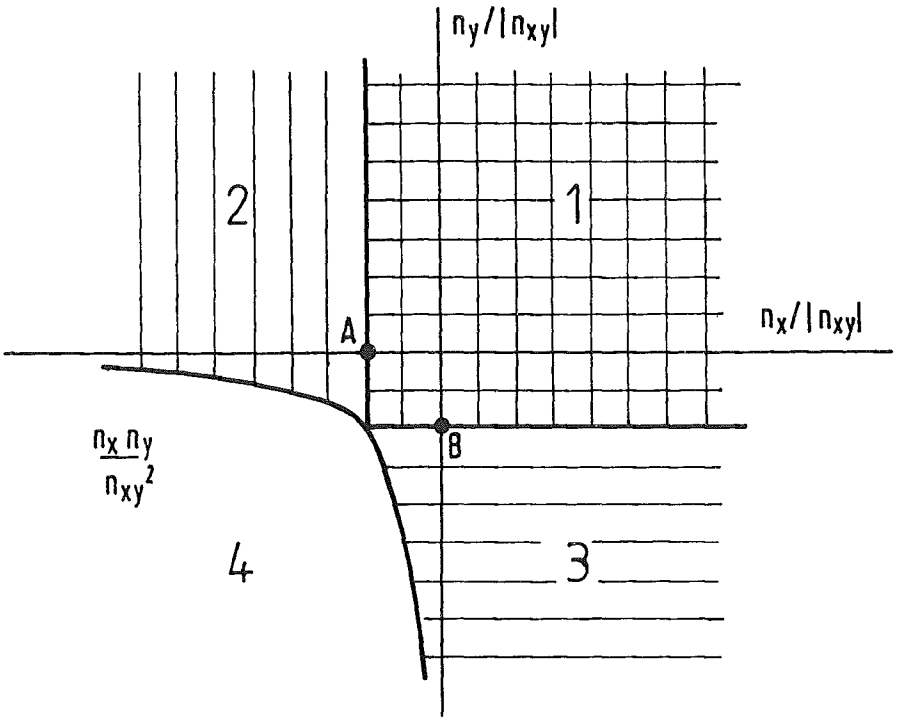

COORDINATES OF A AND B ARE (-1, 0) AND (0, -1) IF $\theta = 45°$

CASE 1 Reinforcement required in x and y directions
CASE 2 Reinforcement required only in y direction
CASE 3 Reinforcement required only in x direction
CASE 4 No reinforcement required

Fig.4.4-38: Boundaries between loading cases requiring different arrangements of reinforcement

$$n_x = -n_c \cos^2 \theta \tag{4.4-84}$$

$$n_y = n_{sy} - n_c \sin^2 \theta \tag{4.4-85}$$

$$n_{xy} = n_c \sin\theta \cos\theta \tag{4.4-86}$$

From (4.4-84) and (4.4-86)

$$\cot\theta = \frac{-n_x}{n_{xy}} \tag{4.4-87}$$

While from (4.4-85)

$$n_{sy} = n_y + \frac{n_{xy}^{\ 2}}{|n_x|} \tag{4.4-88}$$

The concrete stress limit remains that of equations (4.4-82) and (4.4-83), but it should be observed that θ is now determined by the loading and cannot be freely chosen.

The corresponding expressions when $n_{sy} = 0$ are:

$$\tan\theta = \frac{-n_y}{n_{xy}} \tag{4.4-89}$$

$$n_{sx} = n_x + \frac{n_{xy}^{\ 2}}{|n_y|} \tag{4.4-90}$$

If both n_x and n_y are sufficiently large compressions, the plate is in biaxial compression, with principal forces per unit width:

$$n_I, n_{II} = \frac{n_x + n_y}{2} \pm \sqrt{\left[\frac{(n_x - n_y)^2}{4} + n^2{}_{xy}\right]} \tag{4.4-91}$$

which requires $n_x n_y \geq n^2{}_{xy}$.

The design limit for the larger compression can reasonably be taken as f_{cd1}, although a somewhat higher value could be justified in view of the biaxial compression.

Fig.4.4-38 shows the boundaries between the four design cases. Cases 2 and 3, covered by equations (4.4-87) to (4.4-90) are the same as for beam webs carrying shear.

The case of pure shear loading of a plate is one which offers opportunities for verification of the above by comparison with test data. If the reinforcement is equal in the x and y directions, equations (4.4-80) and (4.4-81) give

$$n_{xy} = n_{sx} = n_{sy}$$

with yield values applying for the steel forces at failure, subject to the upper limit of resistance from equation (4.4-82). Thus

$$(n_{xy})_u = (n_{sx})_y = (n_{sy})_y \leq 0.5 f_{c2} t$$

where the suffices u and y outside the brackets denote 'ultimate' and 'yield' and f_{c2} is the unfactored resistance to compression in cracked concrete

$$f_{c2} = 0.6 f_c (1 - f_c / 250)$$

If one set of reinforcement has a lower resistance than the other, failure may occur after its yield but without the yielding of the second set, i.e. by compression of the concrete while the direction of the compression is adjusting to the value required for both sets of reinforcement to yield.

Taking the x-direction steel to have the lesser resistance, equation (4.4-78) gives

$$n_x = 0 = (n_{sx})_y - n_c \cos^2\theta \text{ or } n_c = (n_{sx})_y / \cos^2\theta$$

then from equation (4.4-77)

$$(n_{xy})_u = n_c \sin\theta \cos\theta = (n_{sx})_y \tan\theta$$

with $n_c = f_{c2} t$, $\cos\theta = \sqrt{[(n_{sx})y / f_{c2} t]}$

Finally

$$(n_{xy})_u = f_{c2} t \sqrt{\frac{(n_{sx})_y}{f_{c2} t}} \sqrt{\left[1 - \frac{(n_{sx})_y}{f_{c2} t}\right]}$$

which is the same as the ultimate shear in a web failing with stirrups yielding and concrete crushing.

If both sets of steel yield, equations (4.4-78) and (4.4-79) give

$$\sin\theta = \sqrt{[(n_{sy})_y / n_c]} \text{ and } \cos\theta = \sqrt{[(n_{sx})_y / n_c]}$$

whence $(n_{xy})_u = \sqrt{[(n_{sx})_y (n_{sy})_y]}$

The effects of axial loading in addition to shear can be treated by the basic equations. In the particular case of equal biaxial forces ($n_x = n_y = \lambda n_{xy}$, with λ positive for tension), if both sets of reinforcement yield:

$$\left(1-\lambda^2\right)\left(\frac{n_{xy}}{f_{c2}t}\right)^2+\lambda\left(\frac{n_{sx,y}+n_{sy,y}}{f_{c2}t}\right)\left(\frac{n_{xy}}{f_{c2}t}\right)-\frac{n_{sx,y}}{f_{c2}t}\frac{n_{sy,y}}{f_{c2}t}=0$$

If only the x-direction reinforcement yields:

$$\left(1+\lambda^2\right)\left(\frac{n_{xy}}{f_{c2}t}\right)^2+\lambda\left(1-\frac{n_{sx,y}}{f_{c2}t}\right)\left(\frac{n_{xy}}{f_{c2}t}\right)-\left(\frac{n_{sx,y}}{f_{c2}t}\right)\left(1-\frac{n_{sx,y}}{f_{c2}t}\right)=0$$

Fig.4.4-39 shows a comparison between predictions made as above and results of tests by Vecchio and Collins (1982), Vecchio, Collins and Aspiotis (1994) and Pang and Hsu (1995). The data covers concrete strengths from 11.6 to 68.5 N/mm^2, ratios of y-direction to x-direction reinforcement up to 9:1 and cases of loading in pure shear, shear plus biaxial tension and shear plus biaxial compression. The only results not plotted are those for a few specimens reinforced in only one direction, secondary failures at the loading points and three specimens from the first reference subject to axial compression and shear, with the compression high enough to prevent a fully cracked state.

(7.3) Combined in-plane and out-of-plane loading

The effects of out-of-plane loading acting alone or in combination with in-plane loading can be treated by viewing the slab or plate as a sandwich in which the outer layers resist in-plane forces while the core carries transverse shear.

If the outer layers are assumed to be of equal thickness and a single value (z) is assumed for all the lever arms, the actions on the outer layers are as illustrated in Fig.4.4-40, from which it should be noted that the effects of in-plane shear and torsion from the out-of-plane loading are always additive in one layer and subtractive in the other.

As a first approximation the outer layers can be taken to have thicknesses equal to $^1/_3$ of the plate thickness t and z can be taken as 2t/3.

The outer layers can then be designed as plates loaded in-plane and subjected to the actions of Fig.4.4-40. If necessary the lever arms can be adjusted once the initial calculations have been made, the stresses in the concrete have been examined and the depths to reinforcement can be assessed.

In selecting values for the angles θ it should be noted that a local minimum for the total amount of reinforcement required is always obtained for $\theta = 45°$. However other values may be preferred to keep the principal compressions in directions close to those in an uncracked plate or because of the practicalities of arranging reinforcement. As a general rule $15° \leq \theta \leq 75°$ is a prudent range in order to avoid problems of compatibility which arise if the compression is too nearly coincident with reinforcement intended to yield in tension.

The core of the sandwich resists the out-of-plane shear accompanying changes in m_x, m_y or m_{xy}. For equilibrium of a layer such as that in Fig.4.4-41