

STRUCTURAL ROBUSTNESS OF THE STAIRCASE IN THE CITG BASEMENT: RELIABLE ACCESS TO A POTENTIAL BOMB SHELTER

TU Delft

Author: Xavi Kortekaas
Student number: 5858208
Date: 28-4-2025
Counselor 1: Pierre Hoogenboom
Counselor 2: Henk Jonkers

Preface

This report was made as a Bachelor thesis for the course Civil Engineering.

This report is intended for readers from the field of Civil Engineering who have an interest in structural analysis and - evaluation. Basic knowledge from concepts such as math, dynamic response, material properties, dynamics and strength of materials are prerequisites.

Writing this report would not have been possible without the help of my counselors Dr. ir. P.C.J. (Pierre) Hoogenboom and Prof. dr. H.M. (Henk) Jonkers.

Delft, June 2025

Xavi Kortekaas

Abstract

The robustness of the staircase in the CiTG was evaluated in this study to answer the following question: **Does the structural design of the Civil Engineering basement staircase resist falling rubble?** This question is researched, because there is a demand for space that can serve as potential bomb shelter. First, the cause for this study was introduced and the methodology for the research was set up. This was then followed by an analysis of the structural properties of the staircase. This was done with a MatrixFrame model. Next, the composition of the rubble was assumed, and a Python Model was created to calculate the impact force generated by the rubble. After this a Python model is created to determine the dynamic response of the staircase. All the information gathered from the models was used to perform a failure analysis to see if the platform fails or not. From this research it was concluded that the staircase won't resist the assumed amount falling rubble, because the moments caused by the impact of the rubble are too high. This makes the basement of the CiTG building unsuitable as a bomb shelter.

Table of Contents

Preface 1
Abstract 2
1. Introduction 4
2. Methodology 5
3. Structural properties of the staircase 7
3.1 Connections of the staircase 7
3.2 Dimensions of the staircase 8
3.3 Element composition and the normative cross-sectional areas 10
4. Falling rubble 14
4.1 The characteristics of the impact and the debris 14
4.2 The impact force 14
5. Dynamic response of the staircase 17
5.1 Setting up the model and determining parameters 17
5.2 Dynamic response of the platform: rubble hits the platform simultaneously 18
5.3 Dynamic response of the platform: rubble hits the platform in intervals 22
5.4 Testing for different time intervals 23
6. Failure analysis of the central platform 25
6.1 Checking for moments 25
6.2 Checking for shear 28
6.3 Checking for displacement 30
7. Discussion 32
7.1 Answers to sub-questions 32
7.2 Limitations 33
7.3 Future research recommendations 34
8. Conclusion 35
Literature list 36
Appendix I: Python code for dynamic response model 39
Appendix II: Formulas 51
Appendix III: Additional figures and information 52
The velocity-time and distance-time diagrams for the falling rubble 52
The derivation of the eventual equation of motion 53

1. Introduction

Global geopolitical tensions have increased significantly since the previous year. The invasion of Ukraine by Russia is still ongoing, with no resolution in sight. The threat of Russia invading a NATO nation increases every day the war in Ukraine continues. A recent development influencing global geopolitics was the election of Donald J. Trump as the president of the United States of America in 2024. Trump's pro-Russia - and trade policies have deteriorated the relationship between the USA and other NATO nations. These policies have raised concerns about the USA's reliability as a NATO partner in the event of a conflict. These factors make one thing clear; Europe must be able to defend itself. A key issue is that Europe has relied heavily on the United States in the past for their defense capabilities. Europe therefore lacks the necessary facilities and equipment to ensure its own defense. Because the threats are more prominent than ever, it is important that the resources are built up and obtained as soon as possible. While most of the equipment can be purchased quickly, the construction of the necessary facilities takes time, which may be in short supply given the current situation. One essential type of facility is a bomb shelter. These facilities provide shelter during an aerial bombardment. These shelters have an identical structure to most basements. As a result, basement structures can potentially be used as bomb shelters if they meet the structural and safety requirements. One of these requirements is that the exits of the shelter can't be blocked.

In this study, the following question is answered: **Does the structural design of the Civil Engineering basement staircase resist falling rubble?** To answer this question, the study examines: the geometric dimensions and structural properties of the staircase; the estimated load from falling rubble and the resulting forces; the dynamic response of the staircase to those forces; and determine the force to which the staircase collapses. Other structural elements of the basement won't be discussed in this report. Different structural elements of the basement, such as the roof slab, the beams and columns above the basement have already been researched in other studies.

The build-up of the report is as follows. Chapter 2 presents the methodology of this study. Chapter 3 outlines the geometric dimensions and structural properties of the staircase. Chapter 4 estimates the volume of rubble resulting from an explosion, the height from which it falls and the resulting impact force. determined. In Chapter 5 a model is developed to simulate and analyze the staircase's dynamic response for the cases where the rubble hits the platform at the same time or in intervals. Chapter 6 calculates the maximum displacement before failure. The results from the preceding chapters are used to propose potential improvements in Chapter 7. Finally, Chapter 8 presents the conclusions drawn from the research in previous chapters.

2. Methodology

In this chapter, the methodology of the study is outlined.

Structural properties of the staircase: The first sub-question that needs to be answered is: what is the structural design of the staircase? This question was answered by determining connections between the elements of the staircase empirically and measuring the dimensions of the staircase on site, because no construction drawings were available. With this information, a model was made in MatrixFrame, which was later used to calculate the forces in the staircase under certain loading conditions. The next sub-question that needs to be answered is: Which types of reinforcement are used in the staircase? There were no construction drawings available for staircase. However, it could be seen from certain points that the stairs were prestressed, but it was impossible to see how far the prestressed cables went into the staircase. Due to the length of the central platform, it was also assumed that the central platform had conventional reinforcement. The amount and composition of reinforcement was determined by estimating the maximum load it has to carry under normal conditions. This load was then used to calculate the amount of reinforcement in the platform. Finally, the area, Young's modulus and the moment of inertia are calculated for each element in the staircase.

The impact force: The first sub-question that was answered in this chapter is: What is the composition of the rubble that falls on the staircase? Due to the lack of literature and construction drawings of the CiTG building, it was impossible to accurately determine the composition of the rubble, so a composition was assumed, and the weight was calculated. The second sub-question in this section is: What is the impact force created by the rubble? First, literature is used to understand how the impact force can be calculated, and which formulas are used to calculate the impact force. After that, a Python model was made where the falling rubble is simulated as a falling plate where a gravitational force and air resistance works on. From this model, the velocity at the moment of impact is calculated and that velocity is then used in the model to calculate the impact force.

Dynamic response of the staircase: The first sub-question that is answered in this chapter is: How can the dynamic response be mathematically determined and be put into a model? It was researched with literature that the dynamic response can be described by a second-order differential equation. This equation is solved to show where the equations come from, and these equations are used in a Python model. This model calculates the displacement and velocity of the platform over time. Other calculations are made by the model, like the eigenfrequency and the displacement at the end are made to verify the validity of the model. The next sub-questions that are answered are: What is the maximum displacement when the rubble hits the platform simultaneously and when the rubble hits the platform in intervals. Does the duration of

the time intervals matter for the dynamic response? The model can simulate two different situations, one where all the rubble falls at the same time and one where the rubble falls in intervals. The time duration of the intervals is changed to see if it influences the maximum displacement.

Failure analysis: The first sub-question that is answered in this section is: What is the maximum moment and shear force that the platform can resist, and is this sufficient to resist the impact force in each situation? The formulas for these calculations were retrieved from the appropriate literature and the MatrixFrame model was used to calculate the moments and shear forces for both situations, and they are compared to the moments and forces that are created by the impact of the falling rubble. The next question that is answered is: Does the staircase fail due to the dynamic response? In this chapter the spring force due to the displacement and the spring yield strength are calculated to see if the element fails or not.

3. Structural properties of the staircase

To assess whether the basement is suitable as a bomb shelter, it is essential to define the structural properties of the staircase. These properties are then used to develop a static scheme, which can later be used to model the dynamic response.

3.1 Connections of the staircase

The entire staircase of the basement comprises three interconnected elements: two flights of stairs and a central platform that connects them. The lower flight stairs are clamped to the basement floor, while the upper flight staircase is clamped to the first floor. Figure 1 provides a top-view picture of the staircase.

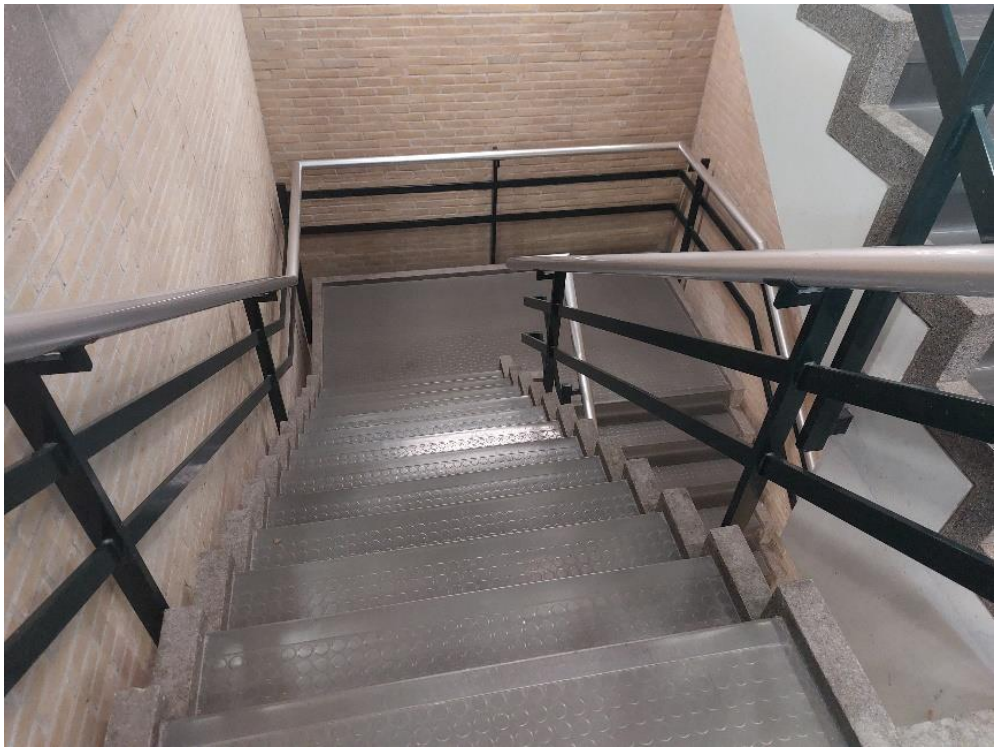

Figure 1 Top-view picture of the staircase

Since the platform is directly connected to the staircase, it can therefore be said that the entire staircase is one construction clamped two times.

3.2 Dimensions of the staircase

The dimensions of the staircase are critical for evaluating the basement's suitability as a bomb shelter. The original construction drawings were unavailable, so all the measurements were obtained empirically. The top and bottom stairs are identical to each other, which is why only 1 staircase is drawn. The side elements of the stairs are elevated compared to the rest of the elements in the staircase. These elevations are neglected in the drawing, since they serve no structural function. The staircase is not connected to the wall. This is possible because the staircase is prestressed. The prestressing cables go under the stairs to the platform. The sketch of the top and side view of the platform can be seen in figure 2 and figure 3 respectively. The dotted line that runs through the staircase is the prestressing cable. These measurements are used to further develop the static scheme in figure 4.

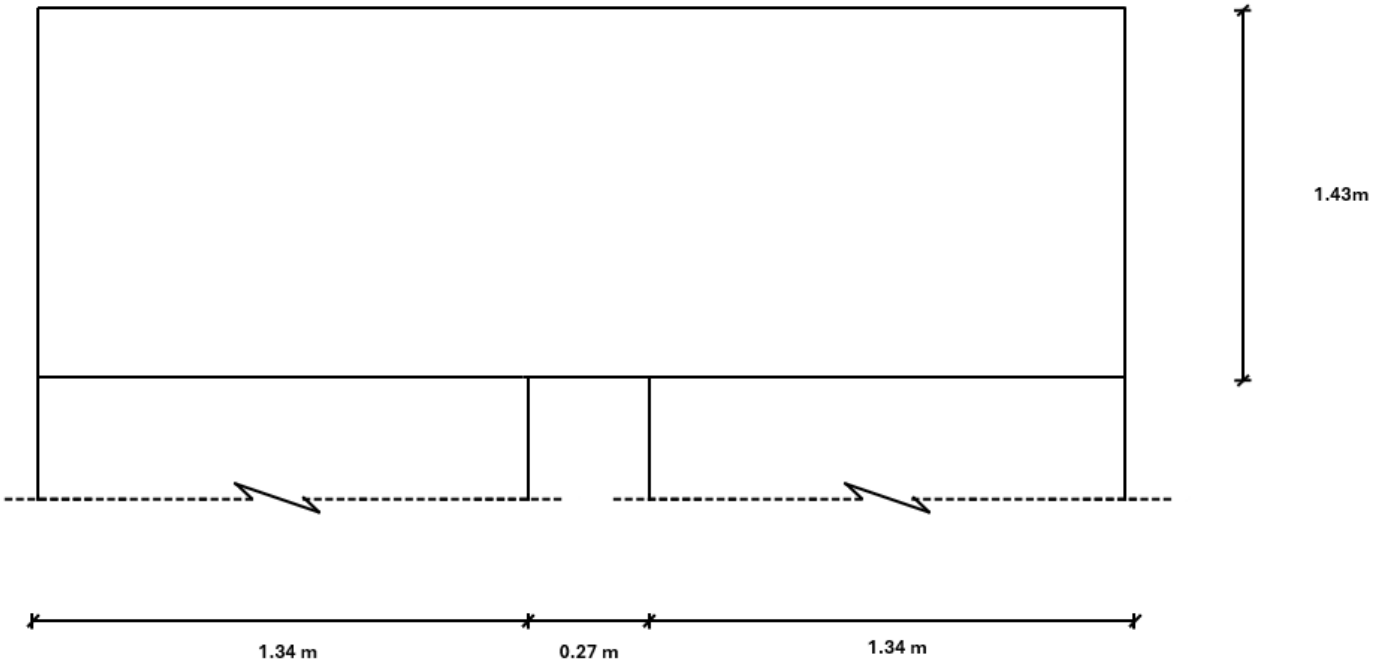

Figure 2 Top view sketch of the platform

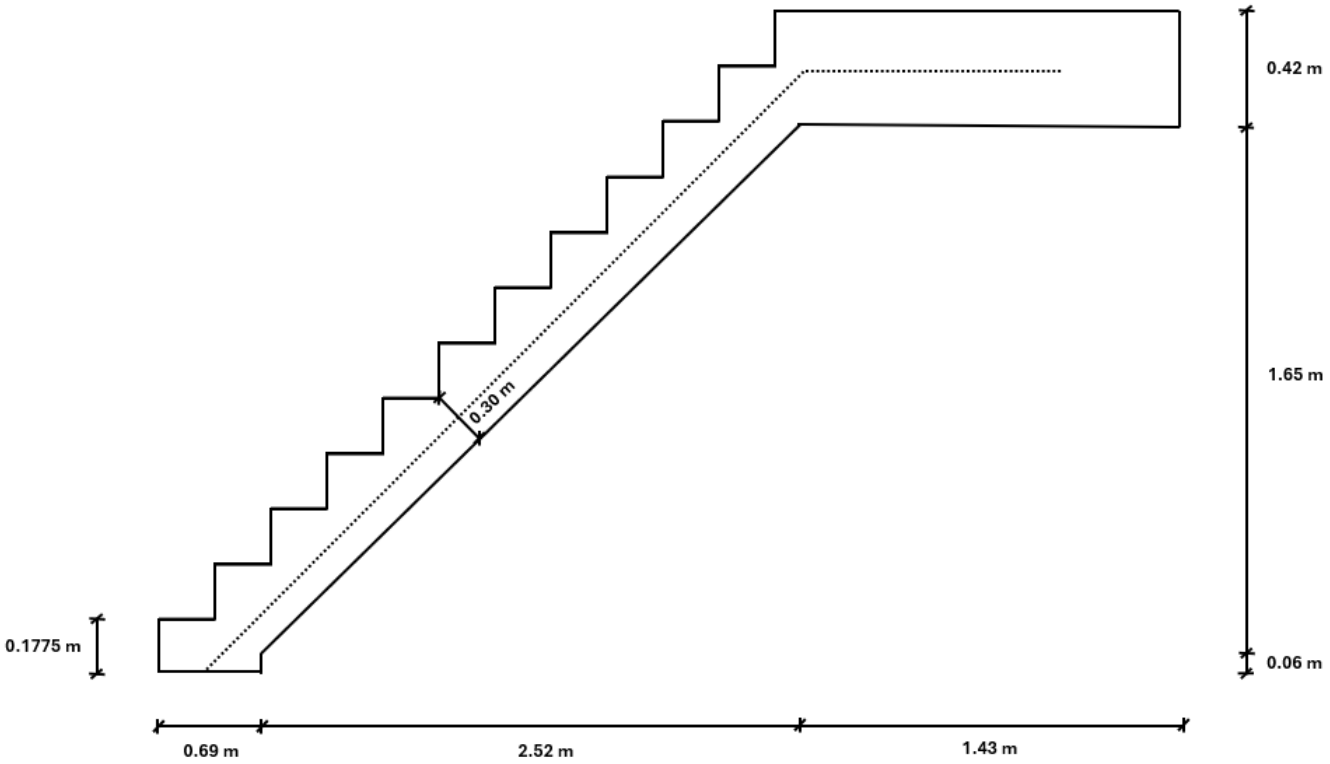

Figure 3 Side view of the staircase

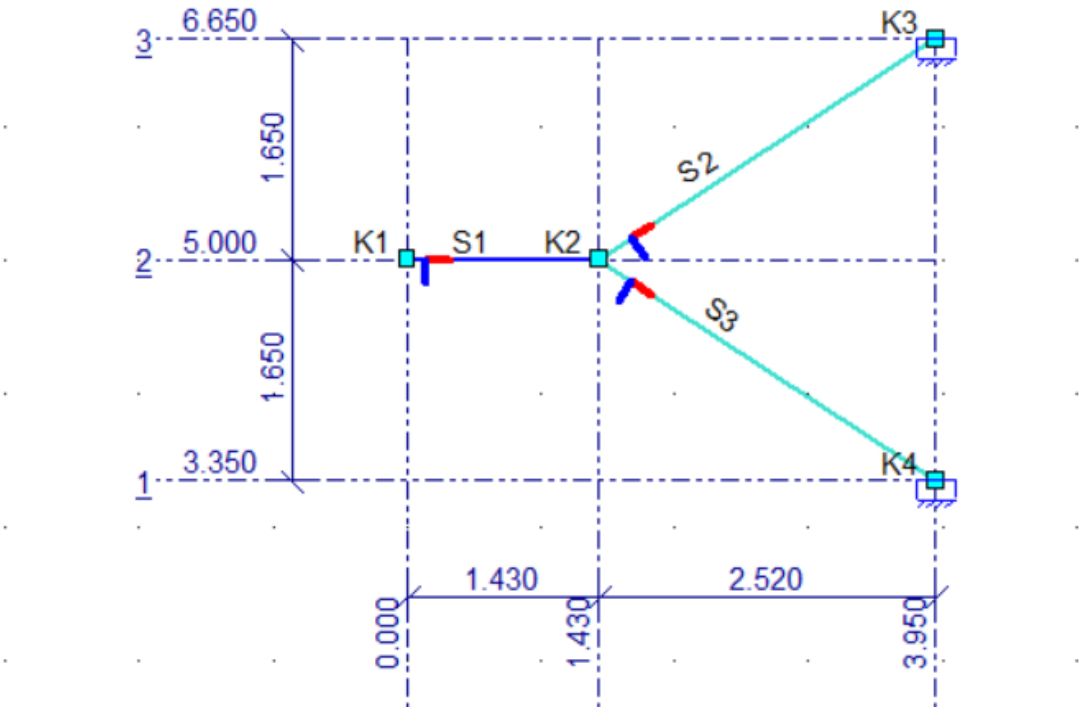

Figure 4 Static scheme of the staircase with measurements

3.3 Element composition and the normative cross-sectional areas

The structural elements are all composed of concrete. Although it is not known which concrete class was used for the stairs, the basement and basement roof were constructed with C25/30 concrete (Rietveld, 2024). It is therefore assumed that the staircase was also constructed with C25/30 concrete. The Young's modulus (E) that corresponds to this concrete class is 31000 MPa (The European Union, 2004).

As was mentioned earlier, the stairs are prestressed elements and therefore contain no conventional reinforcement. It is assumed that the central platform does have reinforcement; however, the actual amount is unknown. Consequently, an estimation of the longitudinal – and stirrup reinforcement, which carries the moments and shear forces respectively, in the central platform is made based on the loads it's expected to resist under normal conditions.

The term q_{Gk} is the load caused by the self-weight of the platform, while q_{Qk} represent the variable load. In this context, the variable load corresponds to the load imposed by the maximum number of people that can occupy the stairs. The density of normal weight concrete with reinforcement is 25 kN/m^3 (The European Union, 2002). The dimensions of the platform are used to calculate the self-weight acting on the platform.

$$q_{Gk} = 25 * 0.42 = 10.5\ kN/m^2$$

To get the variable load, it is necessary to analyze the most extreme loading condition the staircase can be under. The Civil Engineering building is a public university building. This corresponds to category C3 of imposed loads. Category C3 provides that the variable load should be between 3 to 5 kN/m^2 (The European Union, 2002). A variable load of 5 kN/m^2 is assumed, because during special events, like an open day, the building can get very crowded.

The factors of safety are 1.2 for the self-weight and 1.5 for the permanent load (Braam & Lukovic, z.d.). These values are inserted in the formula and the total load on the platform is calculated.

$$q_{ed} = (1.2 * 10.5 + 1.5 * 5) * 2{,}95 = 59.3\ kN/m$$

This load is implemented in the MatrixFrame model on S1 so the moments and the shear force in the staircase can be calculated. The loads on the stairs are neglected, because they do not influence the forces in the platform. The moment – and shear diagram are presented in figure 5 and 6 respectively.

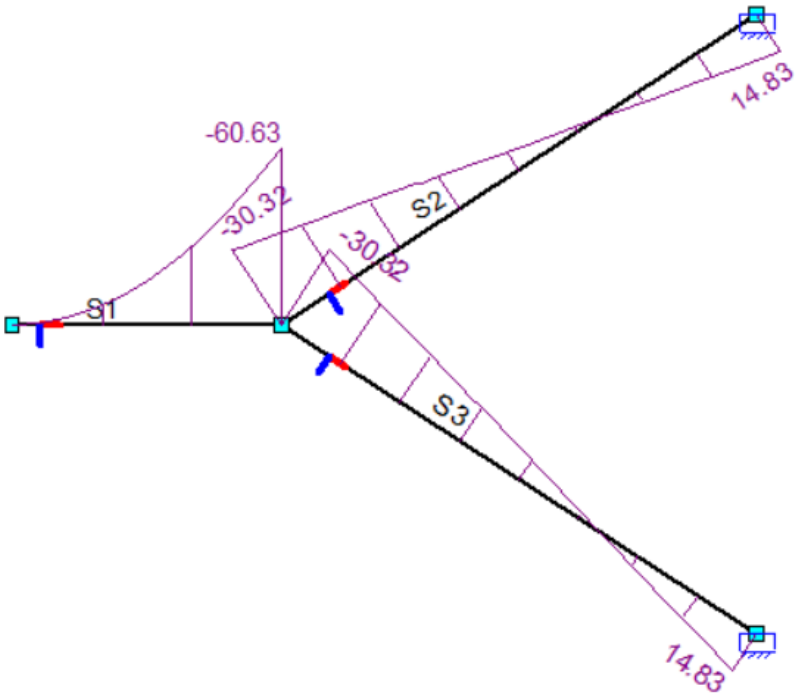

Figure 5 The moment diagram of the staircase when q_{ed} is applied to the central platform

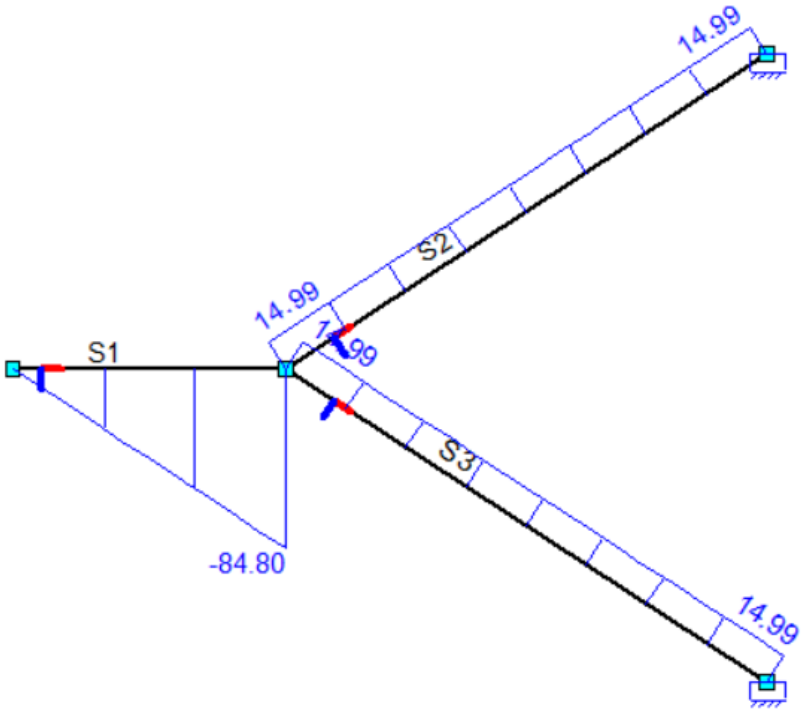

Figure 6 The shear force diagram of the staircase when q_{ed} is applied to the central platform

According to figures 5 and 6, M_{ed}, in the platform is 60.63 kNm and the maximum shear force, V_{ed}, is 84.80 kN. Knowing these values, it is possible to calculate the amount of stirrup - and longitudinal reinforcement needed to carry the loads.

In this formula θ represents the angle of the cracks caused by shear forces, this angle should be between 21,8° and 45° (Hendriks, 2023a). Setting θ to 45° gives the largest amount of reinforcement, therefore 45° is assumed. (The steel that is used as reinforcement is B500B, because this type of steel is mainly used for rebars. The yield strength of B500B is equal to 500 N/mm^2 (Alperen, 2016). The safety factor for steel is 1.15 (Faculty of Civil Engineering and Geosciences & Lukovic, 2019). The f_{yd} can now be calculated, which is done below.

$$f_{yd} = \frac{500}{1.15} = 435\ N/mm^2$$

The term z in the reinforcement formulas represents the distance between the tensile force in the steel and compressive force in the top of the concrete.

The h is the height of the element which is 420 mm in this case. The c is the concrete cover that is used in the element. The value of c_{min} is dependent on the structural class and the exposure class. The exposure class for the staircase is assumed to be X0, since the staircase is inside a building and isn't exposed to high air humidity (Lukovic, 2025). Structural Class S5 is assumed for the Civil Engineering building, since it can be considered as a monumental building (Prasad, 2020). With this information it can be determined that $c_{min} = 15\ mm$. The Δc_{dev} is recommended to be 10 mm (The European Union, 2004). The calculation of c is done below.

$$c = 15 + 10 = 25\ mm$$

The diameter of the bars, $\emptyset_{long}$ is chosen to be as small as possible, which is 8 mm (Van Wijngaarden, 2015). This is done due to the width of the element. The width causes the bars to have a large distance between them if they the diameters are relatively big. The smaller the diameter of the bars, the more bars are needed and the smaller the distance between each bar is. The smallest possible stirrup diameter is 6 mm (Civil, 2023). The area for stirrups is divided by 2, because the shear force is divided over the stirrups. Half goes to the right side and half to the left. Furthermore, the number of bars needed for longitudinal reinforcement is rounded upwards, because placing a percentage of a bar is impossible. The calculations for the d term, z term, longitudinal – and stirrup reinforcement are presented below. These values were calculated with formulas 2, 3, 5 and 6 from Appendix II.

$$d = 420 - 25 - 6 - 0.5 * 8 = 385\ mm$$

$$z = 0.9 * 385 = 346.5\ mm$$

$$A_{sl} = \frac{60630000}{0.9 * 385 * 435} = 402.25\ mm^2$$

$$\frac{A_{sw}}{s} = \frac{84800 * \tan(45)}{0.9 * 385 * 435 * 2} = 0.28\ mm^2/m$$

$$number\ of\ bars = \frac{402.25}{\frac{1}{4}\pi * 8^2} = 8.03, so\ 9\ bars\ are\ needed$$

In figure 7, the composition of the reinforcement in the central platform is presented.

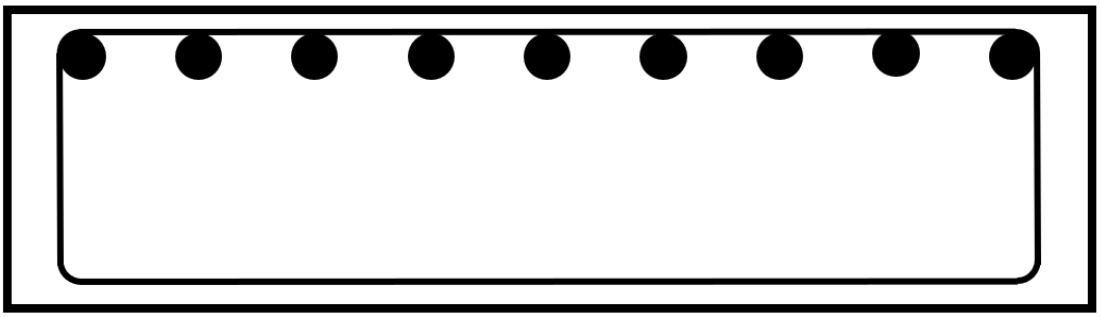

Figure 7 The composition of the reinforcement in the central platform

The cross-sectional area of the elements is calculated using the formula below.

$$A = b * h$$

In this formula b represents the width and h the height of the element. The central platform has a constant cross section along its length. This is not the case for the stairs, because the height of the cross section varies. The normative cross section is where the height is the smallest. The height is smallest at the intersection point between steps. The height at this point is 30 cm.

Another property of the cross section that must be calculated is the moment of inertia. Since the cross sections are rectangular, the formula for the moment of inertia and the calculation of element S1 is presented below.

$$I = \frac{1}{12}bh^3$$

$$I = \frac{1}{12} * 2.95 * 0.42^3 = 0.018\ m^4$$

In table 1, the necessary values to complete the static scheme outlined. These values are implemented in the static scheme to complete it.

Table 1 Cross sectional properties of the elements in the staircase construction

Element	$h\ (m)$	$b\ (m)$	$E\ (MPa)$	$A\ (m^2)$	$I(m^4)$
S1	0.42	2.95	31000	1.18	0.018
S2	0.3	1.34	31000	0.402	$3.015 * 10^{-3}$
S3	0.3	1.34	31000	0.402	$3.015 * 10^{-3}$

4. Falling rubble

When the building collapses due to an explosion, falling debris can impact adjacent structural elements. The resulting force exerted by the debris might be strong enough to cause structural failure. It is therefore essential to know how much debris is created by the explosion, the composition of the rubble and the force that the falling debris exerts.

4.1 The characteristics of the impact and the debris

The Civil Engineering building is a large, multi-story structure that consists of 7 floors above ground level, with a basement below it. The floor-to-ceiling height is approximately 7 meters. Due to the height and size of the building, multiple bombs are required to achieve complete demolition of the building, which is why it is assumed that there is no progressive collapse, so collapse only happens because of the explosive force of the bombs.

Determining the composition of the debris is challenging, because it is not possible to exactly know which materials and how much of it falls on the platform. Therefore, an assumption is made that 0.5 m^3 of rubble falls on the platform. The density of rubble is in the range of 1400 and 1600 kg/m^3 (Bouw Service Nederland B.V., z.d.). The average of this range is assumed as the actual density, which is 1500 kg/m^3. The mass of the debris is therefore 750 kg.

4.2 The impact force

The rubble is modeled as a 750 kg plate with a frontal surface area of 1 m^2. It is dropped from a height of 7 meters. As the rubble falls, its velocity increases over time due to gravitational acceleration, however, this acceleration is counteracted by the air resistance, which increases with velocity. Figure 8 presents the free body diagram of the rubble (Physics Ninja, 2019).

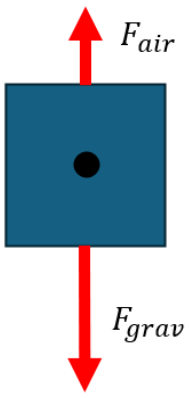

Figure 8 The free body diagram of the rubble

The downward force , F_{grav}, is the gravitational force that pulls the rubble downward, while the upward force, F_{air}, corresponds to the air resistance of the rubble, which is created by the downward motion. These forces work in opposite directions and can be combined, which creates the net force, F_{net}. The mentioned force can be calculated by the formulas below. (Physics Ninja, 2019).

$$F_{grav} = m * g$$

$$F_{air} = \frac{1}{2}\rho C_{drag} A_{front} v^2$$

$$F_{net} = m * a$$

$$F_{net} = F_{grav} - F_{air}$$

In these formulas, m represents the mass of the rubble. The term g is the gravitational acceleration, which is equal to 9.81 m/s^2. ρ is the density of air which corresponds to 1.293 kg/m^3 (NASA, 2024). A_{front} is the frontal surface area, which is 1 m^2 in this case. C_{drag} is the drag coefficient and is normally experimentally determined. The drag coefficient of a plate is 1.28 (NASA, z.d.), which is also the drag coefficient that is assumed here. v is the velocity of the object, which increases with time and a is the acceleration of the rubble, which decreases over time.

The velocity needs to be known when the rubble hits the central platform. This can be done by calculating the at which time a certain velocity appears. The formula for the velocity at a certain time is derived in the following way (Physics Ninja, 2019).

$$\frac{dv}{dt} = g - \frac{\frac{1}{2}\rho C_{drag} A_{front}}{m} v^2$$

Solving this integral gives a formula, where the velocity of a falling object, without neglecting air resistance, can be calculated at a certain time. v_t in this formula represents the terminal velocity, which is the maximum velocity a falling object can reach. This is because the air resistance increases when the velocity increases, so at a certain speed both forces have an equal magnitude, causing the acceleration of the object to be 0. The formula to calculate the velocity of a falling object at a certain time, including air resistance, is presented below (Physics Ninja, 2019).

$$v(t) = v_t * \tanh\left(\frac{gt}{v_t}\right)$$

$$v_t = \sqrt{\frac{g * m}{\frac{1}{2}\rho C_{drag} A_{front}}}$$

Integrating the $v(t)$ formula gives the distance the object has fallen at a certain time. That formula is given in the equation below.

$$s(t) = \frac{v_t^2}{g} * \ln\left[\cosh\left(\frac{gt}{v_t}\right)\right]$$

The known distance of 7 meters between the ceiling and central platform can be used to calculate at which time and velocity the rubble hits platform. Using the known values for calculation yields a time of $t = 1.196\ s$, the time at which the rubble hits the platform and velocity of $v = 11.674\ m/s$, which is the impact velocity. With the impact velocity, it is possible to calculate the impact force. The formula presented below is used to calculate the impact force (OpenStax, 2025).

$$F_{impact} = \frac{m\Delta v}{\Delta t}$$

The term Δv represents the difference in velocity between the falling rubble and the central platform, while Δt denotes the duration of the impact. In this case, determining the impact duration is hard due to the complexity of the interaction. Therefore, the impact duration from a comparable scenario is used. The reference case that is used is a collision between a prestressed concrete floor of 0.8 m^2 of 100 mm thickness with 21 wires and a falling hammer, which is 12.3 ms (Kumar et al., 2017). The exact values of each parameter are known, and the impact force can be calculated, which is done in the calculation below.

$$F_{impact} = \frac{750 * 11.674}{12.3 * 10^{-3} * 1000} = 712\ kN$$

From this section, it is concluded that a 0.5 m^3 rubble falling on the platform from a height of 7 meters creates an impact force of $712\ kN$ when gravity and drag are the forces working on the rubble.

5. Dynamic response of the staircase

This chapter presents a model that simulates the dynamic response of the staircase. The first section details the modeling approach, including calculations, assumptions and parameters and in the second section, the model is used to simulate the staircase's dynamic response under the impact force. In the first case all the rubble hits the platform at the same time, while in the second case the rubble hits the platform in intervals. It is also important to determine the influence of the time between intervals. Therefore, a test is done with different interval sizes, to determine the impact of the duration of the intervals.

5.1 Setting up the model and determining parameters

The dynamic response of the staircase can be modelled in an analytical way as a mass-spring system, since both stairs can be modelled as a single spring, working on the central platform. The central platform is the mass attached to the spring in the mass-spring model. The model starts moving due to the impulse created by the falling rubble, which gives an initial velocity to the system. With this information, the mass-spring system is developed and shown in figure 9. The axis indicates that downward movement gives a positive x value.

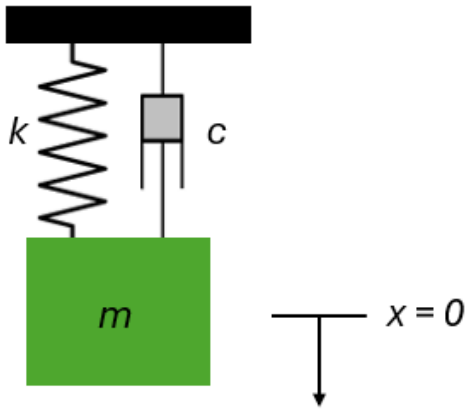

Figure 9 The mass-spring model for the staircase

The equation of motion in this case is shown below.

$$m\ddot{x} + c\dot{x} + kx = F(t)$$

The equation of motion can also be written in the canonical form. This is done to make the later equations less uncluttered. The equation of motions in the canonical form shown below (Van Dalen & Hendrikse, 2024a).

$$\ddot{x} + 2\zeta\omega_0\dot{x} + {\omega_0}^2 x = \frac{F(t)}{m}$$

$$\omega_0 = \sqrt{\frac{k}{m}}$$

$$\zeta = \frac{c}{c_{crit}}$$

$$c_{crit} = 2\sqrt{km}$$

Since the system is represented by a second-order differential equation, initial conditions are required to obtain the solution. The initial conditions defined as $x(0) = x(0)\ and\ \dot{x}(0) = \dot{x}(0)$. Solving the differential equation with these initial conditions, and assuming that the system is underdamped, yields the following expressions for displacement and velocity.

$$\omega_1 = \omega_0\sqrt{1-\zeta^2}$$

$$A = \left(x(0) - \frac{F(t)}{k}\right)$$

$$B = \frac{\dot{x}(0) + \zeta\omega_0\left(x(0) - \frac{F(t)}{k}\right)}{\omega_1}$$

$$x(t) = e^{-\zeta\omega_0 t}(A\cos(\omega_1 t) + B\sin(\omega_1 t)) + \frac{F(t)}{k}$$

$$\dot{x}(t) = e^{-\zeta\omega_0 t}[(B\omega_1 - A\zeta\omega_0) * \cos(\omega_1 t) + (-A\omega_1 - B\zeta\omega_0) * \sin(\omega_1 t)]$$

These equations are used to model the dynamic response in Python.

5.2 Dynamic response of the platform: rubble hits the platform simultaneously

Before calculating the values for the model, it is essential to determine where the rubble is going to land in the model. The most extreme response happens when the rubble falls on the edge of the central platform. This is however very unlikely to happen, since the rubble will be more spread out over the platform. For this reason, the impact force is placed in the middle of the platform. All the rubble hits the central platform simultaneously, so the force on the central platform is equal to the force created by the impact, which is 721 kN. The situation for this case is shown in figure 10.

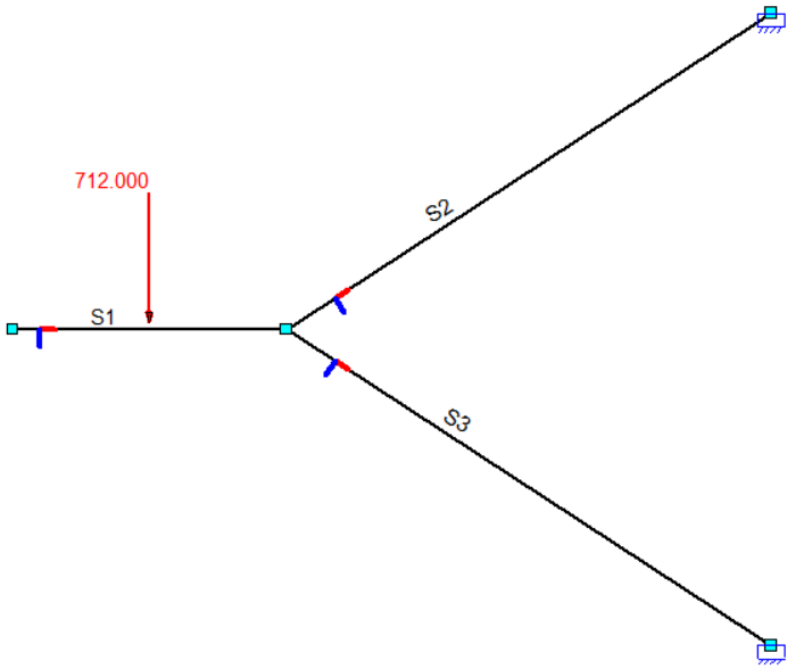

Figure 10 The situation that is used to model the dynamic response

When the rubble hits the platform, it is put into motion. However, the rubble itself is also put into motion, because the rubble stays on the platform. This results in the mass of the mass spring system being the mass of the platform and the mass of the rubble added up. The density of reinforced concrete is 2500 kg/m^3 and the mass of the rubble was assumed to be 750 kg in chapter 4. The mass of the spring system is calculated below.

$$m = m_{platform} + m_{rubble} = 2500 * 0.42 * 1.43 * 2.95 + 750 = 5179.43\ kg$$

The spring constant k is defined by the deflection that occurs right below the force. The impact force F_{impact} was calculated to be 712000 N. The deflection of the central platform that occurs right below this impact force is 3.1593 mm. With these values, the spring constant is calculated below.

$$k = \frac{712000}{3.1593 * 10^{-3}} = 225366379\ N/m$$

For reinforced concrete a damping ratio of 0.05 is assumed (Lu et al., 2019). With this assumption, it is possible to calculate the damping coefficient of the system. The calculation is done below.

$$c = 2\sqrt{km} * \zeta = 2 * \sqrt{225366379 * 5179.43} * 0.05 = 108040\ Ns/m$$

The force $F(t)$ is the force that induces the dynamic response. The parameter $F(t)$ changes over time. When the rubble hits the floor, the impact force and the gravitational force created by the rubble put the platform into motion. The impact force disappears after a certain time, but the gravitational force remains on the platform. It is assumed

that the impact force dissipates after 12.3 milliseconds. This gives the conditions for $F(t)$.

$$F(t) = \begin{cases} 712000 + 750 * 9.81, & t \leq 0.0123 \\ 750 * 9.81, & t > 0.0123 \end{cases}$$

The initial conditions in this case are $x(0) = 0$ and $\dot{x}(0) = 0$. The initial displacement is 0 because the displacement due to self-weight is neglected so there is no initial displacement. The rubble does transfer some velocity to the central platform, but due to the stiffness of the platform, it is assumed that no velocity is transferred to the platform which leads to the initial velocity to be 0. The impact force dissipates after a certain time. The displacement and velocity at this time are saved as a separate variable and they are used as initial conditions to solve the differential equation for when the impact force has dissipated.

The spring is also assumed to deform elastically. This is not realistic since the spring will eventually start deforming plastically. Therefore, a line is plotted into the figure that shows when the spring transitions from elastic and plastic deformation. The values above this line are not correct but still provide a good enough estimation to determine if the staircase will fail or not. The reinforcement in the platform starts to yield when the stress in the reinforcement bar is equal to $435\ N/mm^2$. The displacement where the spring starts deforming plastically is calculated below.

$$u = \frac{F}{k} = \frac{435 * 9 * \frac{1}{4}\pi * 8^2}{225366379} * 1000 = 0.87\ mm$$

Inserting these parameters in the Python model provides the graphs for displacement and velocity which are presented in figure 11.

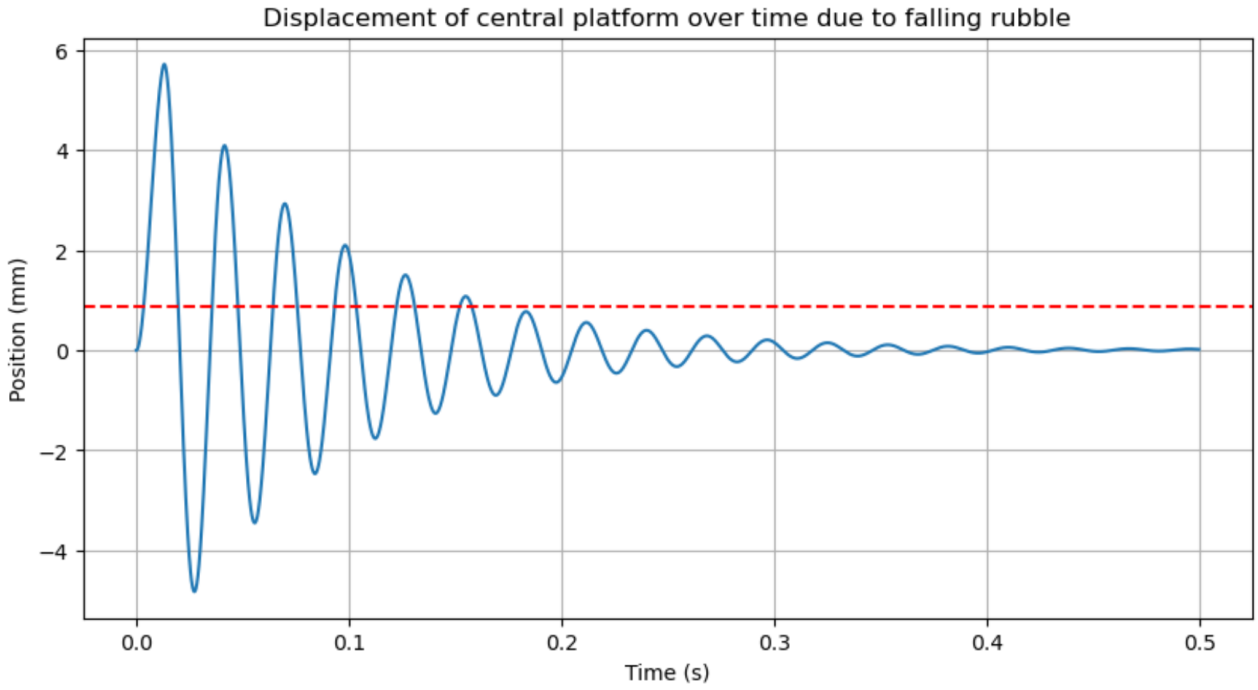

Figure 11 The displacement over time of the central platform if rubble hits the platform simultaneously

It is important to note the displacement due to self-weight is neglected in this model. The validity of the model does have to be verified, and this will be done by comparing the displacement at 1 second from the model and the static displacement that is calculated by hand and by calculating the eigenfrequency. From this model, the maximum displacement that occurs is $5.72\ mm$.

The displacement at 1 second should be almost equal to the displacement that occurs due to the gravitational force of the rubble, since at 1 second, the oscillation of the platform would have mostly stopped. The displacement due to the gravitational force of the platform is calculated below.

$$u = \frac{F}{k} = \frac{750 * 9.81}{225366379} * 1000 = 0.0327mm$$

When the response is modeled for 1 second and the last value from the list that is used to store and plot the displacement graph is printed, the displacement is the exact same, so the model is valid in this area.

The eigenfrequency of the system is calculated below.

$$f = \frac{1}{2\pi} * \sqrt{\frac{k}{m}} = \frac{1}{2\pi} * \sqrt{\frac{225366379}{5179.43}} = 33.19\ Hz$$

This value for the eigenfrequency is a bit on the higher side. However, the stairs are relatively short, and the stairs are clamped in on both sides. This increases the stiffness and therefore the eigenfrequency also increases.

5.3 Dynamic response of the platform: rubble hits the platform in intervals

When the rubble hits the central platform in intervals, the dynamic response will be less extreme. However, each time the rubble hits, a dynamic response follows. These responses can influence each other, which could potentially cause the platform to fail. It is therefore important to determine how each response influences each other.

The parameters c and k remain the same as they were when all the rubble hits the platform simultaneously and the rubble still falls in the middle of the platform. But the parameters m and $F(t)$ change over time. It is assumed that the total amount of rubble falls in 5 parts, each 150 kg. Because each part falls separately, the velocity and therefore the impact changes. Inserting a mass of 150 kg in the Python model that calculates the impact force, gives an impact force of 140 kN. This shows that the total force that is generated by the falling rubble in this case is smaller than when all the rubble hits the platform simultaneously. The first part hits the platform at $t = 0$, the force from this impact puts the platform into motion and mass is also added to the system by the rubble. This force is active for 0.0123 seconds, after that the impact force dissipates, but the gravitational force stays on the platform. From $t = 0.0123$ to $t = 0.1123$ no rubble hits the platform. After $t = 0.1123$ rubble hits the platform again, which in turn causes another dynamic response. This pattern repeats until $t = 0.5615$. This gives the following conditions for $F(t)$ and m.

$$F(t) = \begin{cases} 140000 + 150 * 9.81, & t \leq 0.0123 \\ 150 * 9.81, & 0.0123 < t \leq 0.1123 \\ 140000 + 300 * 9.81, & 0.1123 < t \leq 0.1246 \\ 300 * 9.81, & 0.1246 < t \leq 0.2246 \\ 140000 + 450 * 9.81, & 0.2246 < t \leq 0.2369 \\ 450 * 9.81, & 0.2369 < t \leq 0.3369 \\ 140000 + 600 * 9.81, & 0.3369 < t \leq 0.3492 \\ 600 * 9.81, & 0.3492 < t \leq 0.4492 \\ 140000 + 750 * 9.81, & 0.4492 < t \leq 0.4615 \\ 750 * 9.81, & 0.4615 < t \leq 0.5615 \end{cases}$$

$$m = \begin{cases} 2500 * 0.42 * 1.43 * 2.95 + 150, & t \leq 0.1123 \\ 2500 * 0.42 * 1.43 * 2.95 + 300, & 0.1123 < t \leq 0.2246 \\ 2500 * 0.42 * 1.43 * 2.95 + 450, & 0.2246 < t \leq 0.3369 \\ 2500 * 0.42 * 1.43 * 2.95 + 600, & 0.3369 < t \leq 0.4492 \\ 2500 * 0.42 * 1.43 * 2.95 + 750, & 0.4492 < t \leq 0.5615 \end{cases}$$

The initial conditions in this case are also $x(0) = 0$ and $\dot{x}(0) = 0$ for the same reason as in the model where all the rubble falls simultaneously. When the impact force disappears, the displacement and velocity at that moment are saved and used as initial

conditions for the differential equation where the impact force has dissipated. This action is done 5 times, until all the rubble has fallen.

Inserting these parameters in the model provides the graph for displacement is presented in figure 12. The dashed red line in figure 12 is the displacement where the plastic deformation starts.

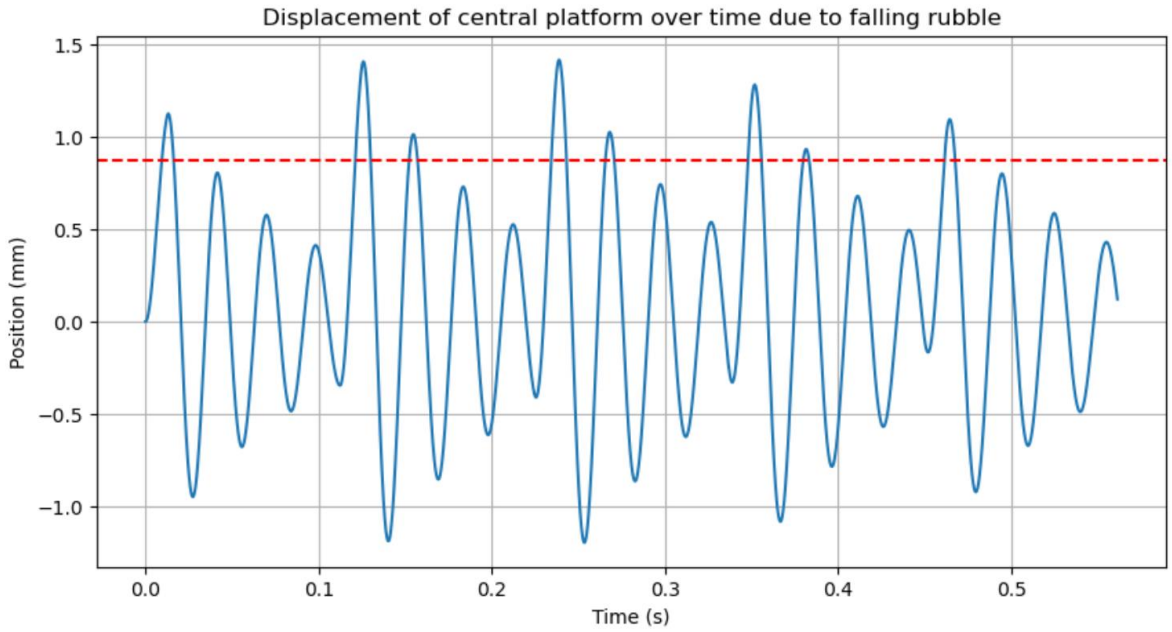

Figure 12 The displacement over time of the central platform if rubble hits the platform in intervals

The displacement increases with the first three impacts, but after that the displacement only gets smaller, because the rubble hits the platform when the platform moves upwards. This causes the displacement to get smaller. The maximum displacement for this case is $1.42\ mm$

5.4 Testing for different time intervals

Before a conclusion can be drawn from the case where rubble falls in intervals, multiple time intervals need to be tested to see if the chosen time intervals influence the results. The time intervals and impact duration of 0.08 seconds and of 0.3 seconds are chosen. The applied force and mass stay the same, since the effect of the time intervals would otherwise not be possible to observe. The graphs for displacement for these intervals can be seen in figure 13 and 14 respectively.

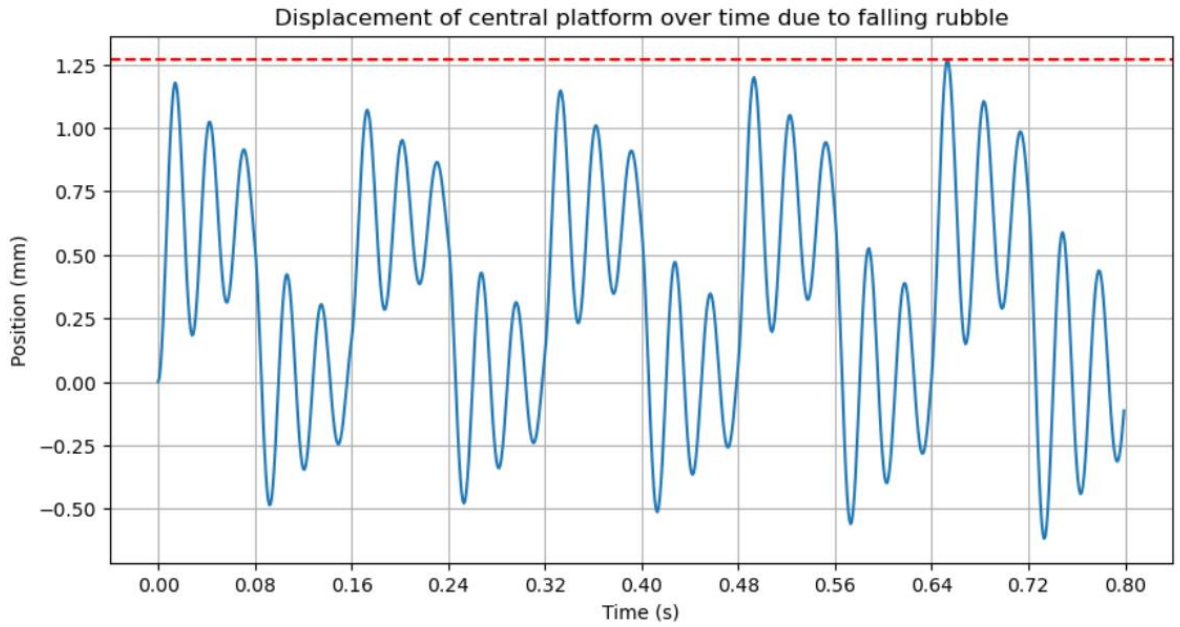

Figure 13 Displacement of the platform when the time interval is 0.08 seconds

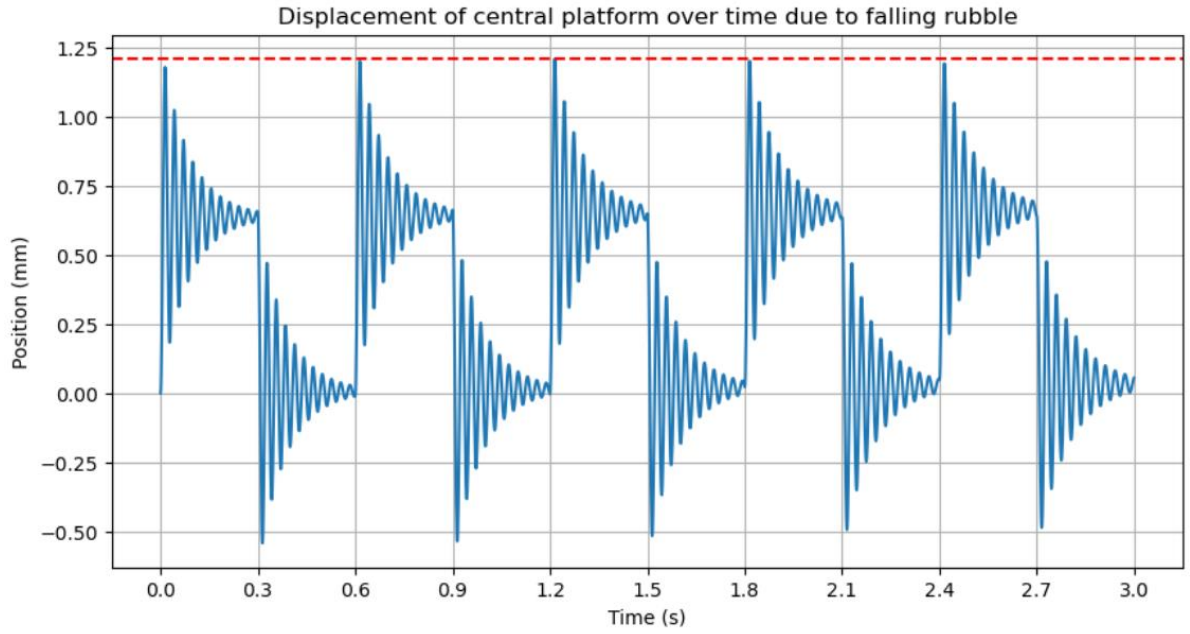

Figure 14 Displacement of the platform when the time interval is 0.3 seconds

When these figures are compared to figure 12, it can be observed that the displacement changes when the time interval changes. The maximum displacement is bigger when the time interval is 0.0123 seconds compared to when it is 0.08 or 0.3 seconds. The maximum displacement also occurs at different moments. In figure 12 the maximum displacement downwards happens when the third impact occurs, but in figure 13 it occurs when the fifth impact occurs. The time interval does influence the maximum displacement and when it occurs.

6. Failure analysis of the central platform

In this chapter a failure analysis of the central platform is conducted to determine whether the element fails due to the falling rubble. The shear and moment capacities are calculated to see if they are exceeded during the impact. Additionally, the maximum displacement is also calculated, and it is analyzed if the actual displacement exceeds the maximum displacement.

6.1 Checking for moments

The stress-strain relationship that is used to determine the moment resistance is the bi-linear stress-strain relation. The formulas that are used for the failure analysis related to the moments in the structure are shown below.

$$M_{rd} = N_s * (d - \beta \cdot x_u)$$

$$N_s = A_{sl} * f_{yd}$$

The concrete strength class has influence on the parameters α and β. The concrete strength class was determined earlier to be C25/30. The values for the parameters α and β that correspond to this concrete strength class are 0.75 and 0.39 respectively when using the bi-linear stress-strain relation (Hendriks, 2023a). The f_{cd} can also be calculated from the strength class, since f_{cd} is the concrete strength divided by the concrete safety factor. The safety factor for concrete is 1.5. This results in the following value for f_{cd}.

$$f_{cd} = \frac{25}{1.5} = 16.67\ N/mm^2$$

The area of the longitudinal reinforcement is different from what was calculated previously in chapter 3.3, because in that chapter, the exact area of longitudinal reinforcement needed to withstand the self-weight and variable loads was calculated. This is unrealistic since you cannot place half a bar of reinforcement. In that chapter is was stated that 9 bars were needed to carry the loads. This results in the actual value for A_{sl}.

$$A_{sl} = 9 * \frac{1}{4}\pi * 8^2 = 452.39\ mm^2$$

With the A_{sl} known, the parameter N_s can be calculated.

$$N_s = 452.39 * 435 = 196789.65\ N$$

The parameter x_u is the height of the compressive zone of the concrete. The x_u can be calculated with the formula below.

$$z = d - \beta * x_u$$

The parameter z and β were already determined to be equal to $0.9d$, and d and was calculated earlier. The calculation for x_u is shown below.

$$x_u = \frac{385 - 0.9 * 385}{0.39} = 98.72 \ mm$$

With all these values M_{rd} can be calculated.

$$M_{rd} = 196789.65 * \frac{(385 - 0.39 \cdot 98.72)}{1000000} = 68.19 \ kNm$$

The most realistic situation where the smallest moments are induced in the platform is when only the self-weight and one fifth of the rubble falls on the platform. This situation is presented in figure 15. The moments in the construction for this situation are calculated and the shown in figure 16.

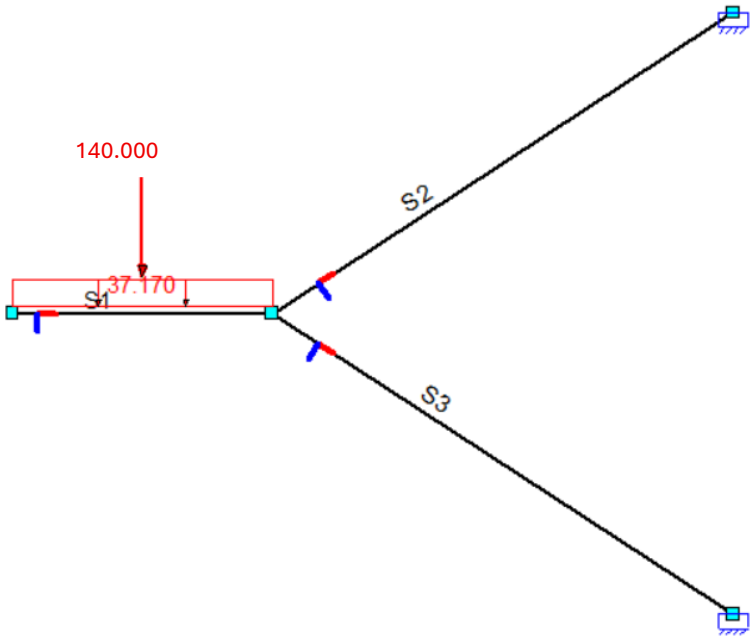

Figure 15 The situation used to calculate the moments in the central platform

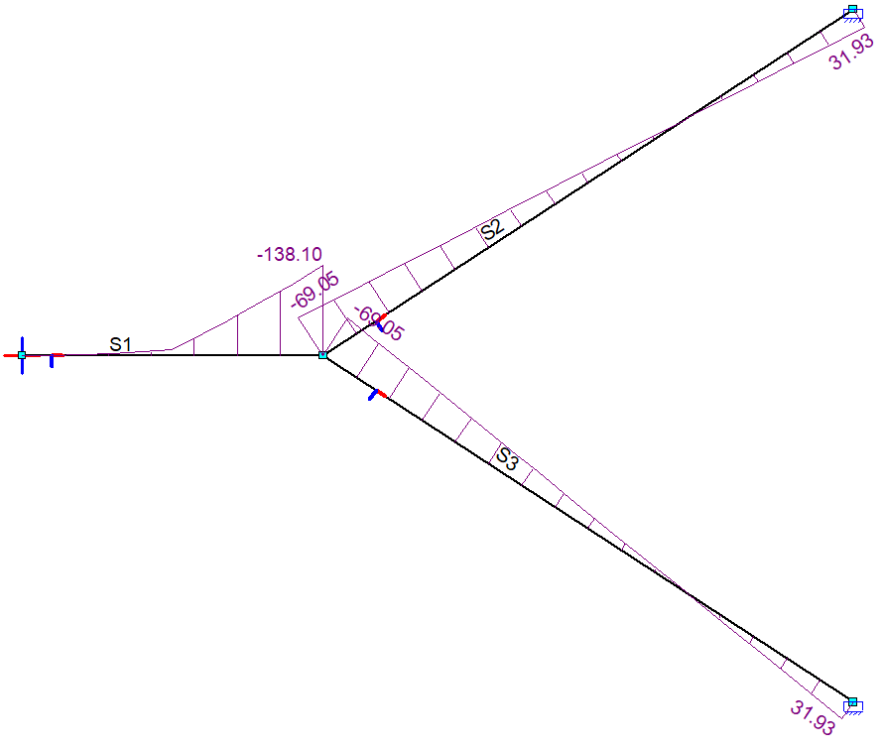

Figure 16 The moments in the platform when the situation from figure 15 occurs

The maximum moment in the central platform is bigger than the M_{rd} so the central platform reinforcement in the central platform will yield. This makes it unsafe to use the platform. The ultimate strain of B500B steel is 5% (Alperen, 2016). The stress that occurs due to the impact force is calculated below. This value is compared to the simplified stress-strain relationship of B500B steel in figure 17.

$$N_s = \frac{138100000}{385 - 0.39 * 98.72} = 398558\ N$$

$$\sigma = \frac{398558}{9 * \frac{1}{4}\pi * 8^2} = 881\ N/mm^2$$

This value is compared to the simplified stress-strain relationship of B500B steel in figure 17. From figure 17, it can be concluded that the ultimate strain in the characteristic curve is reached when the stress is 540 N/mm^2. The stress in the reinforcement is bigger, so the reinforcement will break due to the moments.

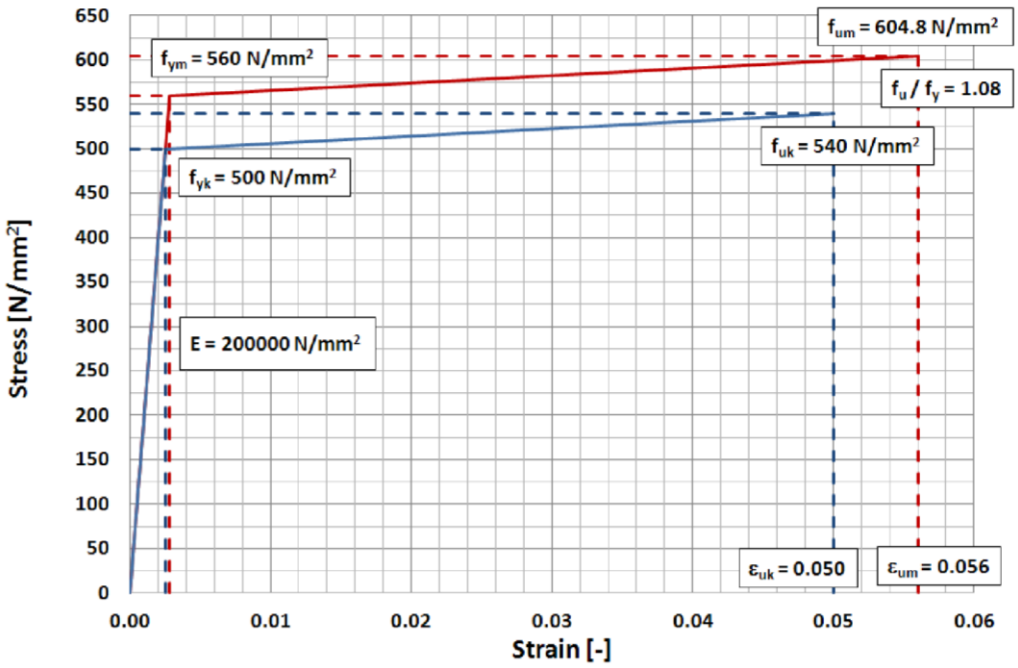

Figure 17 The stress-strain relation of B500B steel (Hingorani et al., 2013)

6.2 Checking for shear

The shear resistance of the concrete element can be calculated with the formulas below.

$$v_{Rd,c} = \max\left(v_{Rd,c,min}\,; v_{Rd,c}\right)$$

$$v_{Rd,c,min} = 0.035 * k^{1.5} * f_{ck}^{0.5}$$

$$v_{Rd,c} = 0.12 * k * (100 * \rho_l * f_{ck})^{\frac{1}{3}}$$

$$k = \min\left(1 + \sqrt{\frac{200}{d}}; 2\right)$$

$$\rho_l = \frac{A_{sl}}{b * d}$$

A concrete strength class of C25/30 gives an f_{ck} of 25 N/mm^2. All the other values have already been determined earlier. The calculations and results are presented below (Hendriks, 2023a).

$$\rho_l = \frac{452.39}{2950 * 385} = 3.98 * 10^{-4}$$

$$k = \min\left(1 + \sqrt{\frac{200}{385}}; 2\right) = 1.72$$

$$v_{Rd,c} = 0.12 * 1.72 * (100 * \ 3.98 * 10^{-4} * 25)^{\frac{1}{3}} = 0.21 \ N/mm^2$$

$$v_{Rd,c,min} \ = \ 0.035 * \ 1.72^{1.5} * \ 25^{0.5} = 0.39 \ N/mm^2$$

$$v_{Rd,c} = \max(0.39; 0.21) = \ 0.39 \ N/mm^2$$

The term $v_{Rd,c}$ is the stress the concrete section. Multiplying the $v_{Rd,c}$ with the cross-section area of the element gives the shear force the concrete can resist.

$$V_{Rd,c} = \frac{0.39 * 2950 * 385}{1000} = 442.94 \ kN$$

The most realistic situation where the smallest shear forces are induced in the platform is when only the self-weight and one fifth of the rubble falls on the platform. The shear force is calculated with the same situation as in figure 15. The shear forces in the construction for this situation are calculated and the shown in figure 18. The shear forces that are present when all the rubble hits the platform simultaneously are shown in figure 19.

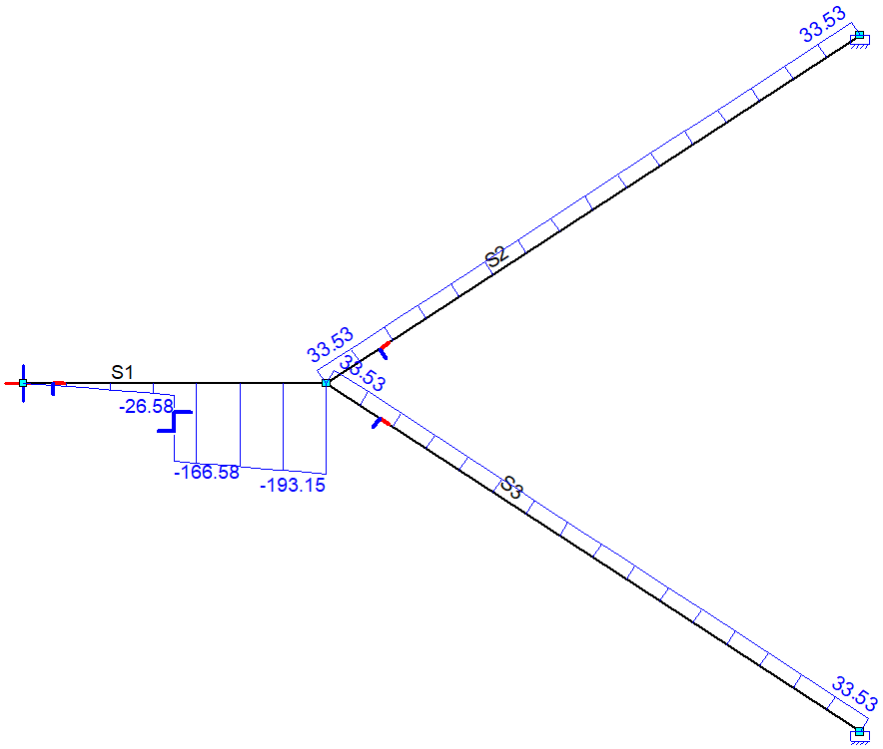

Figure 18 The moments in the platform when the situation from figure 20 occurs

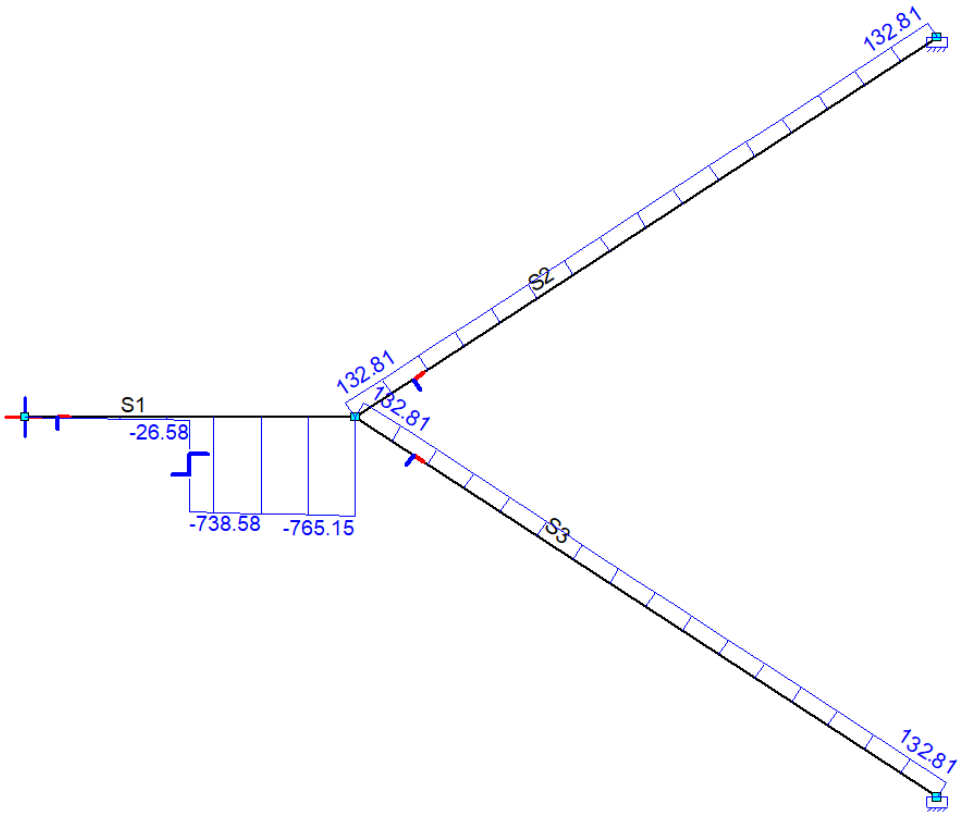

Figure 19 Shear forces in the staircase when rubble falls on it simultaneously

The shear forces become too high when all the rubble hits the platform simultaneously. This will cause the platform to fail.

6.3 Checking for displacement

The displacement can affect 2 parts of the reinforcement of the staircase. The prestressed reinforcement in the stairs and the reinforcement in the central platform.

The force when the spring starts yielding is the same as when the reinforcement starts yielding, which is $435 * 9 * 0.25 * \pi * 8^2 = 196.79\ kN$ and this occurs at a displacement of $0.87\ m$, which was calculated earlier.

The reinforcement in the stair breaks when the strain is 5% of the length of the staircase and it is assumed that there is no bond between the concrete and the reinforcement. The total length of the staircase is 3 meters; this leads to a maximum displacement of 0.15 meters in the diagonal direction. The model calculates the dynamic response in the vertical direction. The angle between the ground and the stairs is 33.2° so the maximum allowable vertical displacement is $0.15 * \sin(33.2) = 0.082\ m$.

The assumption is made that the reinforcement in the central platform is affected over a length of 0.1 meters. The strain remains the same. The tensile force in the reinforcement causes the concrete to expand and crack in the horizontal direction. The crack width of

the central platform is $0.05 * 0.1 = 0.005\ m$. If this is the crack width, then the maximum deflection in the middle of the central platform is $\frac{0.72}{0.42} * 0.005 = 8.57\ mm$. Analyzing the figures 11 and 12 shows that the dynamic response doesn't exceed the threshold of 10 mm. Therefore, the stairs and the central platform won't break due to the dynamic response when rubble falls on the platform, but the reinforcement does yield in both cases. It is important to note that if plastic deformation was included in the model, that this displacement could be exceeded.

7. Discussion

The research limitations are discussed in the first section. In the second section, further research is suggested.

7.1 Answers to sub-questions

The aim of this study was to determine if the staircase in the Civil Engineering basement resists falling rubble. This was evaluated to help decide if the basement of the Civil Engineering building could be used as a bomb shelter in times of war. First, the dimensions of the staircase were measured, and the properties of the reinforcement were estimated or calculated. These properties were used to create a model in MatrixFrame, which was used to determine the deflection, moments and shear forces in the staircase under specific loading conditions. The stairs consist of prestressed concrete and due to the length of the platform it as assumed that the central platform also contained some B500B reinforcement. The dimensions of the staircase were measured on site, so these values are realistic. The reinforcement of the platform was calculated based on the assumptions of the load it must carry under normal conditions, since no construction drawings were available. This means that everything that includes values or calculations related to the reinforcement could vary, but since the assumptions were supported by literature the results would be somewhat realistic.

The following step was determining the properties of the rubble and the impact. The properties of the rubble were assumed, since information about the building and the composition of rubble was hard to find. The impact force was determined with a calculation model where the rubble was modeled as a falling plate where the gravitational force and air resistance worked on. This model calculates the velocity at the moment the rubble hits the platform. This velocity is used to calculate the impact force that acts on the central platform when the rubble hits it. It was assumed that 750 kg of rubble hits the platform from a height of 7 meters. From the model, it was calculated that an impact force of 712 kN is created when this amount of rubble falls on it simultaneously. Other values needed for the calculation were retrieved from literature. The model was set up without neglecting the drag that happens when an object is falling, and the calculations in the model were supported by appropriate literature. The composition of the rubble, and therefore the weight was an assumption. If the construction drawings for the entire building could be acquired the composition of the rubble could be determined accurately, which would improve the conclusion of this research.

The calculated impact force is used in the model to simulate the dynamic response of the platform. The dynamic response was modeled for two different situations; in the first situation all the rubble hits the platform simultaneously and in the second situation the

rubble hits the platform in intervals. The results from these models are a displacement and velocity graph over time. For the second situation, it is tested if the duration of the time interval influences when the maximum displacement occurs and how large this is. From this chapter it was concluded that the maximum displacement when the rubble falls simultaneously is $5.72\ mm$ and $1.42\ mm$ when the rubble falls in intervals. It was also checked if the duration of the intervals would influence the displacement, which it did. As was already mentioned earlier, the model is accurate if only elastic deformation is assumed. Plastic deformation will cause longer displacements, since less force is needed to elongate the element. Therefore, the displacement is underestimated in this model. However, the displacements from this model are still valuable. Because if the structure fails due to displacement when only elastic deformation is assumed, it will also fail when plastic deformation is assumed. Failure of the platform can therefore be determined by this model.

The maximum shear forces, moments and displacement are calculated and the values that were retrieved from the MatrixFrame model and the dynamic response model are compared to these values. Doing this indicates that the platform will fail because the moments in the platform become too large, even if the most beneficial loading conditions is assumed.

7.2 Limitations

One limitation was the lack of information on the staircase and the building. The reinforcement used in the stairs was known to be prestressed, but the construction drawing for the entire staircase couldn't be found in the available time, so a lot of the specific information such as the arrangement and composition was unknown. This limitation makes the results of this paper a lot less accurate, since all the aspects regarding reinforcement were assumed or calculated based on assumptions. The construction drawing for the entire building was needed to determine the composition of the rubble more accurately. This improves the estimation of the impact force that is created when the rubble hits the floor. Having the entire construction drawing for the staircase and the entire building would eliminate this uncertainty.

The final and most crucial limitation was time. The report had to be finished in 8 to 9 weeks. This limited the scope of the research a lot. For example, cracking will influence the stiffness of the spring but the influence of cracking on the dynamic response could not be researched in the time available. The effect of plastic deformation on the dynamic response couldn't be researched for the same reason. The time constraints caused the research to be simplified a lot, which makes the results less accurate.

7.3 Future research recommendations

1. **Improvements:** One potential aspect that could be researched is possible improvements that can be made to make the staircase more robust. Potential solutions could be researched in a follow-up study and from that research a definitive solution to improve the robustness could be proposed
2. **Enhance dynamic response model:** Things like the influence of cracking on stiffness and plastic deformation could be added to the model to get more accurate results.
3. **Enhance falling rubble model:** The composition of the rubble could be more accurately be determined and factors like the drag coefficient could be researched in the lab to determine that value more accurately.

8. Conclusion

In this study, it was evaluated if the staircase of the CiTG building would fail if rubble fell on it. First the dimensions of the staircase were measured and the reinforcement in the staircase was determined or calculated. Next, the composition of the rubble was assumed. A model was made that calculates how long it takes for a falling object that undergoes gravity and air drag to fall a certain height. The time this takes is then used to calculate the impact velocity at that moment, which is then used to calculate the impact force. Rubble with a mass of 750 kg creates an impact that generates a force of 712 kN. This force is then used in a model that calculates the dynamic response of the staircase to this for two different cases, one where the rubble falls simultaneously and one where the rubble falls in intervals. The maximum displacement for each case is $5.72\ mm$ and $1.42\ mm$ respectively. The model only assumes elastic deformation. For the case where rubble falls in intervals, it was also tested if the interval duration had an influence on the displacement, which it does. After that, the MatrixFrame model was used to calculate the moments and shear forces in the platform and the resistance of the platform to those forces was calculated. The moments that were created during the impact in both cases are too big for the reinforcement and the reinforcement starts to yield and break. Even if the most beneficial loading condition is assumed.

In conclusion, based on the models and calculations, the basement of the Civil Engineering Building can't be used as a bomb shelter if the assumed amount of rubble falls on it. This is because the central platform of the staircase will fail due to the rubble creating moments that are too big for the assumed reinforcement to resist. This causes the staircase to collapse, which results in no safe entry or exit in the bomb shelter. This makes it unsuitable as a bomb shelter. This conclusion could be different if the less rubble falls on the platform, but this needs to be researched further.

Literature list

Alperen, A. (2016, May 31). *Rebar B500A / B / C, what is the difference?* Betonstaal.nl. https://www.betonstaal.nl/en/knowledge-centre/reinforcing-steel-b500a-b-c-what-is-the-difference/

Braam, R., & Lukovic, M. (n.d.). *CIE 3150 / CTB 3335 – Concrete structures 2*. https://drive.google.com/file/d/1S-8sJTGW15u0CIB8kauBQMouWIgLavBy/view?usp=drive_link

Bouw Service Nederland B.V. (n.d.). *Eigenschappen van gebroken puin*. Gebroken Puin. https://www.gebrokenpuin.com/wat-is-gebroken-puin/eigenschappen-van-gebroken-puin#:~:text=Afhankelijk%20van%20de%20verdeling%20van,en%201.600%20kg%20per%20m3

Davis, D. (2005). *Vertical spring and hanging mass*. Eastern Illinois University. https://ux1.eiu.edu/~addavis/1150-05/13Oscillations/Vert.html

Fitzpatrick, R. (2006, February 2). *Hooke's law*. https://farside.ph.utexas.edu/teaching/301/lectures/node61.html

Hendriks, M. (2023, October 21). *CTB2220 Beton & staalconstructies B2 Buiging*. https://drive.google.com/drive/folders/1Uoevev6S1YTERooDxwzm0lbMYnpM3vUO?hl=nl

Hendriks, M. (2023a, October 28). *CTB2220 Beton & staalconstructies B4 Dwarskracht*. https://drive.google.com/drive/folders/1Uoevev6S1YTERooDxwzm0lbMYnpM3vUO?hl=nl

Hingorani, R., Pérez, F., Sánchez, J., Fullea, J., Andrade, C., & Tanner, P. (2013). *Loss of ductility and strength of reinforcing steel due to pitting corrosion* (J.G.M. Van Mier, G. Ruiz, C. Andrade, R.C. Yu and X.X. Zhang, Red.). https://drive.google.com/drive/folders/1Uoevev6S1YTERooDxwzm0lbMYnpM3vUO?hl=nl

Kumar, V., Mittal, A. K., & Iqbal, M. A. (2017). Procedia Engineering, *173*, 403–408. https://doi.org/10.1016/j.proeng.2016.12.038

Lu, D., Meng, J., Zhang, S., Shi, Y., Dai, K., & Huang, Z. (2019). Damping ratios of reinforced concrete structures under actual ground motion excitations. In *Conference proceedings of the Society for Experimental Mechanics* (pp. 259–268). https://doi.org/10.1007/978-3-030-12115-0_36

Lukovic, M. (2025, January 18). *CTB3335 Concrete structures 2 L03 Crack width* [Lecture slides].

https://drive.google.com/drive/folders/1Uoevev6S1YTERooDxwzm0lbMYnpM3vUO?hl=nl

Moore, J. (2021, July 22). *15.2: Viscous damped free vibrations*. Engineering LibreTexts. https://eng.libretexts.org/Bookshelves/Mechanical_Engineering/Mechanics_Map_(Moore_et_al.)/15%3A_Vibrations_with_One_Degree_of_Freedom/15.2%3A_Viscous_Damped_Free_Vibrations

NASA. (n.d.). *Shape effects on drag*. https://www.grc.nasa.gov/www/k-12/VirtualAero/BottleRocket/airplane/shaped3.html

NASA. (2024, December 3). *Air mass/density*. NASA Earthdata. https://www.earthdata.nasa.gov/topics/atmosphere/air-mass-density#:~:text=Pure%2C%20dry%20air%20has%20a,of%20at%20least%2050%20km

OpenStax. (2025, March 16). *9.3: Impulse and collisions (Part 1)*. Physics LibreTexts. https://phys.libretexts.org/Bookshelves/University_Physics/University_Physics_(OpenStax)/Book%3A_University_Physics_I_-_Mechanics_Sound_Oscillations_and_Waves_(OpenStax)/09%3A_Linear_Momentum_and_Collisions/9.03%3A_Impulse_and_Collisions_(Part_1)

Physics Ninja. (2019, January 16). *Free fall with air resistance (drag force) (video 2 of 2)* [Video]. YouTube. https://www.youtube.com/watch?v=l_tixVH4aTs&list=PLNeLgl6FpR9-p-YR4xRJ5O_5tnm6UzUcT&index=3

Prasad. (2020, July 1). *Structural class as per Eurocode*. Structural Guide. https://www.structuralguide.com/structural-class/

Rietveld, R. (2024). *Kan de kelder van het Civiele Techniek gebouw dienen als schuilkelder? Onderzoek naar de impact van een explosie op het kelderplafond* [Master's thesis, Technische Universiteit Delft].

The European Union. (2002). *Eurocode 1: Actions on structures – Part 1-1: General actions – Densities, self-weight, imposed loads for buildings* (EN 1991-1-1). https://www.phd.eng.br/wp-content/uploads/2015/12/en.1991.1.1.2002.pdf

The European Union. (2004). *Eurocode 2: Design of concrete structures – Part 1-1: General rules and rules for buildings* (EN 1992-1-1). https://www.phd.eng.br/wp-content/uploads/2015/12/en.1992.1.1.2004.pdf

Urone, P. P., & Hinrichs, R. (2020, March 26). *8.3 Elastic and inelastic collisions*. OpenStax. https://openstax.org/books/physics/pages/8-3-elastic-and-inelastic-collisions

Van Dalen, K., & Hendrikse, H. (2024). *Dynamics of systems CTB2300* [Lecture slides]. https://drive.google.com/drive/folders/1Uoevev6S1YTERooDxwzm0lbMYnpM3vUO?hl=nl

Van Dalen, K. N., & Hendrikse, H. (2024a). *Dynamics of systems CTB2300* [Lecture slides]. https://drive.google.com/drive/folders/1Uoevev6S1YTERooDxwzm0lbMYnpM3vUO?hl=nl

Van Wijngaarden, A. (2015, July 6). *Practical diameters of reinforcing steel*. Betonstaal.nl. https://www.betonstaal.nl/en/knowledge-centre/practical-diameters-of-reinforcing-steel/

Appendix I: Python code for dynamic response model

```
import numpy as np
import math
import matplotlib.pyplot as plt
from scipy.integrate import solve_ivp
```

Reinforcement for central platform

```
h = 420       #mm
cover = 25     #mm
dia_stir = 6    #mm
dia_long = 8    #mm
d = h - cover - 0.5 * dia_long - dia_stir
z = 0.9 * d
fyd = 435      #N/mm^2
V_ed = 84800    #Newton
M_ed = 60630000 #Newton * milimeter
theta = math.radians(45)

A_long = M_ed / (z * fyd)
A_bar = 1/4 * np.pi * dia_long**2
n_long = A_long / A_bar
print('Area longitudinal reinforcement:', round(A_long, 2), 'mm^2')
print('The amount of longitudinal bars needed:', math.ceil(n_long))

A_s_stir = (V_ed * math.tan(theta)) / (z * fyd)
print('Area stirrup reinforceent:', round(A_s_stir, 2), 'mm^2/m')
```

Calculating the impact force

```
# Variables
C = 1.28
rho = 1.293   #kg/m^3
A_f = 1      #m^2
m_rub = 750   #kg
g = 9.81
t_rub = np.arange(0, 10, 0.01)
v = np.zeros(len(t_rub))
s = np.zeros(len(t_rub))
dt = 0.0123
#Plotting the graphs
v_ter = np.sqrt((g * m_rub)/(0.5 * rho * C * A_f))
for I in range(len(t_rub)):
   v_rub = v_ter * np.tanh((g * t_rub[i]) / v_ter)
   v[i] = v_rub

for I in range(len(t_rub)):
   s_rub = (v_ter**2/g) * np.log(np.cosh(g * t_rub[i]/  v_ter))
   s[i] = s_rub

plt.figure()
plt.title('Vecolity-time diagram of the rubble')
plt.xlabel('Time (s)')
plt.ylabel('Velocity (m/s)')
plt.plot(t_rub, v)
plt.axhline(y=v_ter, color='r', linestyle='—', label='Terminal Velocity')
plt.legend()
plt.grid()
```

```
plt.figure()
plt.title('Distance-time diagram of the rubble')
plt.xlabel('Time (s)')
plt.ylabel('Distance (m)')
plt.plot(t_rub, s)
plt.grid()

# Determining velocity of falling rubble
h = 7
t_plat = (v_ter / g) * np.arccosh(np.exp((g * h) / v_ter**2))
v_plat = v_ter * np.tanh((g * t_plat) / v_ter)
F = ((m_rub * v_plat) / dt) / 1000
print(round(t_plat, 3), 'seconds')
print(round(v_plat, 3), 'm/s')
print(round(F, 0), 'kN')
```

Calculating the dynamic response when rubble falls simultaneously

```
m_plat = 2500 * 0.42 * 1.43 * 2.95
m = m_plat + m_rub
k = 225366379
c = 108040
t = np.arange(0, 0.5, 0.001)

w_0 = np.sqrt(k/m)
c_crit = 2 * np.sqrt(k*m)
zeta = c/c_crit
w_1 = w_0 * np.sqrt(1-zeta**2)
```

```
post_p0 = np.zeros(len(t))

vel_p0 = np.zeros(len(t))

eigen = w_0 / (2 * np.pi)

print('Eigenfrequency of the system:',round(eigen, 2))


# Initial condition of the element

x0 = 0

x_dot0 = 0


for i in range(len(t)):

  if t[i] <= 0.1:

    F_imp =  F * 1000 + m_rub * 9.81

    A = x0 - (F_imp/k)

    B = (x_dot0 + zeta*w_0*A) / w_1

    pos = np.exp(-zeta * w_0 * t[i]) * (A * np.cos(w_1 * t[i]) + B * np.sin(w_1 * t[i])) +
(F_imp/k)

    vel = np.exp(-zeta * w_0 * t[i]) * ((B*w_1 - A*zeta*w_0) * np.cos(w_1 * t[i]) + (-A*w_1 -
B*zeta*w_0) * np.sin(w_1 * t[i]))

    post_p0[i] = pos * 1000

    vel_p0[i] = vel

    pos_end = pos

    vel_end = vel

  else:

    F_imp = m_rub * 9.81

    t0 = t[i] - 0.1

    A = pos_end - (F_imp/k)

    B = (vel_end + zeta*w_0*A) / w_1

    pos = np.exp(-zeta * w_0 * t0) * (A * np.cos(w_1 * t0) + B * np.sin(w_1 * t0)) +
(F_imp/k)
```

```
    vel = np.exp(-zeta * w_0 * t0) * ((B*w_1 - A*zeta*w_0) * np.cos(w_1 * t0) + (-A*w_1 - B*zeta*w_0) * np.sin(w_1 * t0))

    post_p0[i] = pos * 1000

    vel_p0[i] = vel


#Plotting the graphs

plt.figure(figsize=(10,5))

plt.title('Displacement of central platform over time due to falling rubble')

print(post_p0[-1])

plt.xlabel('Time (s)')

plt.ylabel('Position (mm)')

plt.plot(t, post_p0)

plt.grid()


plt.figure(figsize=(10,5))

plt.title('Velocity of central platform over time due to falling rubble')

plt.xlabel('Time (s)')

plt.ylabel('Velocity (m/s)')

plt.plot (t, vel_p0, 'r')

plt.grid();
```

Calculating the dynamic response when rubble falls in intervals

```
mas_plat = 2500 * 0.42 * 1.43 * 2.95

k = 225366379

c = 108040

t2 = np.arange(0, 1, 0.001)


# Initial condition of the element

x02 = 0

x_dot02 = 0


post_p02 = np.zeros(len(t2))

vel_p02 = np.zeros(len(t2))


for i in range(len(t2)):

  if t2[i] <= 0.1:

    F_imp2 = (F/5) * 1000 + (m_rub/5) * 9.81

    m = mas_plat + 150

    w_02 = np.sqrt(k/m)

    c_crit2 = 2 * np.sqrt(k*m)

    zeta2 = c/c_crit2

    w_12 = w_02 * np.sqrt(1-zeta2**2)

    A = x02 - (F_imp2/k)

    B = (x_dot02 + zeta2*w_0*A) / w_12

    pos = np.exp(-zeta2 * w_02 * t2[i]) * (A * np.cos(w_12 * t2[i]) + B * np.sin(w_12 * t2[i]))
+ (F_imp2/k)

    vel = np.exp(-zeta2 * w_02 * t2[i]) * ((B*w_12 - A*zeta2*w_02) * np.cos(w_12 * t2[i]) +
(-A*w_12 - B*zeta2*w_02) * np.sin(w_12 * t2[i]))

    post_p02[i] = pos * 1000

    vel_p02[i] = vel
```

```
        pos_end2 = pos
        vel_end2 = vel
    if 0.1 < t2[i] <= 0.2:
        t0 = t2[i] - 0.1
        F_imp2 = (m_rub/5) * 9.81
        m = mas_plat + 150
        w_02 = np.sqrt(k/m)
        c_crit2 = 2 * np.sqrt(k*m)
        zeta2 = c/c_crit2
        w_12 = w_02 * np.sqrt(1-zeta2**2)
        A = pos_end2 - (F_imp2/k)
        B = (vel_end2 + zeta2*w_0*A) / w_12
        pos = np.exp(-zeta2 * w_02 * t0) * (A * np.cos(w_12 * t0) + B * np.sin(w_12 * t0)) +
(F_imp2/k)
        vel = np.exp(-zeta2 * w_02 * t0) * ((B*w_12 - A*zeta2*w_02) * np.cos(w_12 * t0) + (-
A*w_12 - B*zeta2*w_02) * np.sin(w_12 * t0))
        post_p02[i] = pos * 1000
        vel_p02[i] = vel
        pos_end3 = pos
        vel_end3 = vel
    if 0.2 < t2[i] <= 0.3:
        t0 = t2[i] - 0.2
        F_imp2 = (F/5) * 1000 + 2 * (m_rub/5) * 9.81
        m = mas_plat + 300
        w_02 = np.sqrt(k/m)
        c_crit2 = 2 * np.sqrt(k*m)
        zeta2 = c/c_crit2
        w_12 = w_02 * np.sqrt(1-zeta2**2)
        A = pos_end3 - (F_imp2/k)
```

```
        B = (vel_end3 + zeta2*w_0*A) / w_12

        pos = np.exp(-zeta2 * w_02 * t0) * (A * np.cos(w_12 * t0) + B * np.sin(w_12 * t0)) +
(F_imp2/k)

        vel = np.exp(-zeta2 * w_02 * t0) * ((B*w_12 - A*zeta2*w_02) * np.cos(w_12 * t0) + (-
A*w_12 - B*zeta2*w_02) * np.sin(w_12 * t0))

        post_p02[i] = pos * 1000

        vel_p02[i] = vel

        pos_end4 = pos

        vel_end4 = vel

    if 0.3 < t2[i] <= 0.4:

        t0 = t2[i] - 0.3

        F_imp2 = 2 * (m_rub/5) * 9.81

        m = mas_plat + 300

        w_02 = np.sqrt(k/m)

        c_crit2 = 2 * np.sqrt(k*m)

        zeta2 = c/c_crit2

        w_12 = w_02 * np.sqrt(1-zeta2**2)

        A = pos_end4 - (F_imp2/k)

        B = (vel_end4 + zeta2*w_0*A) / w_12

        pos = np.exp(-zeta2 * w_02 * t0) * (A * np.cos(w_12 * t0) + B * np.sin(w_12 * t0)) +
(F_imp2/k)

        vel = np.exp(-zeta2 * w_02 * t0) * ((B*w_12 - A*zeta2*w_02) * np.cos(w_12 * t0) + (-
A*w_12 - B*zeta2*w_02) * np.sin(w_12 * t0))

        post_p02[i] = pos * 1000

        vel_p02[i] = vel

        pos_end5 = pos

        vel_end5 = vel

    if 0.4 < t2[i] <= 0.5:

        t0 = t2[i] - 0.4
```

```
    F_imp2 = (F/5) * 1000 + 3 * (m_rub/5) * 9.81
    m = mas_plat + 450
    w_02 = np.sqrt(k/m)
    c_crit2 = 2 * np.sqrt(k*m)
    zeta2 = c/c_crit2
    w_12 = w_02 * np.sqrt(1-zeta2**2)
    A = pos_end5 - (F_imp2/k)
    B = (vel_end5 + zeta2*w_0*A) / w_12
    pos = np.exp(-zeta2 * w_02 * t0) * (A * np.cos(w_12 * t0) + B * np.sin(w_12 * t0)) +
(F_imp2/k)
    vel = np.exp(-zeta2 * w_02 * t0) * ((B*w_12 - A*zeta2*w_02) * np.cos(w_12 * t0) + (-
A*w_12 - B*zeta2*w_02) * np.sin(w_12 * t0))
    post_p02[i] = pos * 1000
    vel_p02[i] = vel
    pos_end6 = pos
    vel_end6 = vel
  if 0.5 < t2[i] <= 0.6:
    t0 = t2[i] - 0.5
    F_imp2 = 3 * (m_rub/5) * 9.81
    m = mas_plat + 450
    w_02 = np.sqrt(k/m)
    c_crit2 = 2 * np.sqrt(k*m)
    zeta2 = c/c_crit2
    w_12 = w_02 * np.sqrt(1-zeta2**2)
    A = pos_end6 - (F_imp2/k)
    B = (vel_end6 + zeta2*w_0*A) / w_12
    pos = np.exp(-zeta2 * w_02 * t0) * (A * np.cos(w_12 * t0) + B * np.sin(w_12 * t0)) +
(F_imp2/k)
```

```
    vel = np.exp(-zeta2 * w_02 * t0) * ((B*w_12 - A*zeta2*w_02) * np.cos(w_12 * t0) + (-A*w_12 - B*zeta2*w_02) * np.sin(w_12 * t0))
    post_p02[i] = pos * 1000
    vel_p02[i] = vel
    pos_end7 = pos
    vel_end7 = vel
  if 0.6 < t2[i] <= 0.7:
    t0 = t2[i] - 0.6
    F_imp2 = (F/5) * 1000 + 4 * (m_rub/5) * 9.81
    m = mas_plat + 600
    w_02 = np.sqrt(k/m)
    c_crit2 = 2 * np.sqrt(k*m)
    zeta2 = c/c_crit2
    w_12 = w_02 * np.sqrt(1-zeta2**2)
    A = pos_end7 - (F_imp2/k)
    B = (vel_end7 + zeta2*w_0*A) / w_12
    pos = np.exp(-zeta2 * w_02 * t0) * (A * np.cos(w_12 * t0) + B * np.sin(w_12 * t0)) + (F_imp2/k)
    vel = np.exp(-zeta2 * w_02 * t0) * ((B*w_12 - A*zeta2*w_02) * np.cos(w_12 * t0) + (-A*w_12 - B*zeta2*w_02) * np.sin(w_12 * t0))
    post_p02[i] = pos * 1000
    vel_p02[i] = vel
    pos_end8 = pos
    vel_end8 = vel
  if 0.7 < t2[i] <= 0.8:
    t0 = t2[i] - 0.7
    F_imp2 = 4 * (m_rub/5) * 9.81
    m = mas_plat + 600
    w_02 = np.sqrt(k/m)
```

```
    c_crit2 = 2 * np.sqrt(k*m)

    zeta2 = c/c_crit2

    w_12 = w_02 * np.sqrt(1-zeta2**2)

    A = pos_end8 - (F_imp2/k)

    B = (vel_end8 + zeta2*w_0*A) / w_12

    pos = np.exp(-zeta2 * w_02 * t0) * (A * np.cos(w_12 * t0) + B * np.sin(w_12 * t0)) +
(F_imp2/k)

    vel = np.exp(-zeta2 * w_02 * t0) * ((B*w_12 - A*zeta2*w_02) * np.cos(w_12 * t0) + (-
A*w_12 - B*zeta2*w_02) * np.sin(w_12 * t0))

    post_p02[i] = pos * 1000

    vel_p02[i] = vel

    pos_end9 = pos

    vel_end9 = vel

  if 0.8 < t2[i] <= 0.9:

    t0 = t2[i] - 0.8

    F_imp2 = (F/5) * 1000 + 5 * (m_rub/5) * 9.81

    m = mas_plat + 750

    w_02 = np.sqrt(k/m)

    c_crit2 = 2 * np.sqrt(k*m)

    zeta2 = c/c_crit2

    w_12 = w_02 * np.sqrt(1-zeta2**2)

    A = pos_end9 - (F_imp2/k)

    B = (vel_end9 + zeta2*w_0*A) / w_12

    pos = np.exp(-zeta2 * w_02 * t0) * (A * np.cos(w_12 * t0) + B * np.sin(w_12 * t0)) +
(F_imp2/k)

    vel = np.exp(-zeta2 * w_02 * t0) * ((B*w_12 - A*zeta2*w_02) * np.cos(w_12 * t0) + (-
A*w_12 - B*zeta2*w_02) * np.sin(w_12 * t0))

    post_p02[i] = pos * 1000

    vel_p02[i] = vel
```

```
        pos_end10 = pos
        vel_end10 = vel
    if 0.9 < t2[i] <= 1:
        t0 = t2[i] - 0.9
        F_imp2 = 5 * (m_rub/5) * 9.81
        m = mas_plat + 750
        w_02 = np.sqrt(k/m)
        c_crit2 = 2 * np.sqrt(k*m)
        zeta2 = c/c_crit2
        w_12 = w_02 * np.sqrt(1-zeta2**2)
        A = pos_end10 - (F_imp2/k)
        B = (vel_end10 + zeta2*w_0*A) / w_12
        pos = np.exp(-zeta2 * w_02 * t0) * (A * np.cos(w_12 * t0) + B * np.sin(w_12 * t0)) +
(F_imp2/k)
        vel = np.exp(-zeta2 * w_02 * t0) * ((B*w_12 - A*zeta2*w_02) * np.cos(w_12 * t0) + (-
A*w_12 - B*zeta2*w_02) * np.sin(w_12 * t0))
        post_p02[i] = pos * 1000
        vel_p02[i] = vel

#Plotting the graphs
plt.figure(figsize=(10,5))
plt.title('Displacement of central platform over time due to falling rubble')
plt.xlabel('Time (s)')
plt.ylabel('Position (mm)')
plt.plot(t2, post_p02)
plt.xticks(np.arange(0, 1 + 0.1, 0.1))
plt.grid()

plt.figure(figsize=(10,5))
```

```
plt.title('Velocity of central platform over time due to falling rubble')
plt.xlabel('Time (s)')
plt.ylabel('Velocity (m/s)')
plt.plot (t2, vel_p02, 'r')
plt.grid();
```

Appendix II: Formulas

$$q_{ed} = \gamma_g * q_{Gk} + \gamma_Q * q_{Qk} \text{ (1)}$$

$$\frac{A_{sw}}{s} = \frac{V_{ed} * \tan(\theta)}{z * f_{yd}} \text{ (2) (Hendriks, 2023)}$$

$$A_{sl} = \frac{M_{ed}}{z * f_{yd}} \text{ (3) (Faculty of Civil Engineering and Geosciences \& Lukovic, 2019)}$$

$$c = c_{min} + \Delta c_{dev} \text{ (4)}$$

$$d = h - c - \emptyset_{stir} - 0.5 * \emptyset_{long} \text{ (5)}$$

$$z = 0.9d \text{ (6) (Braam \& Lukovic, z.d.)}$$

Appendix III: Additional figures and information

The velocity-time and distance-time diagrams for the falling rubble

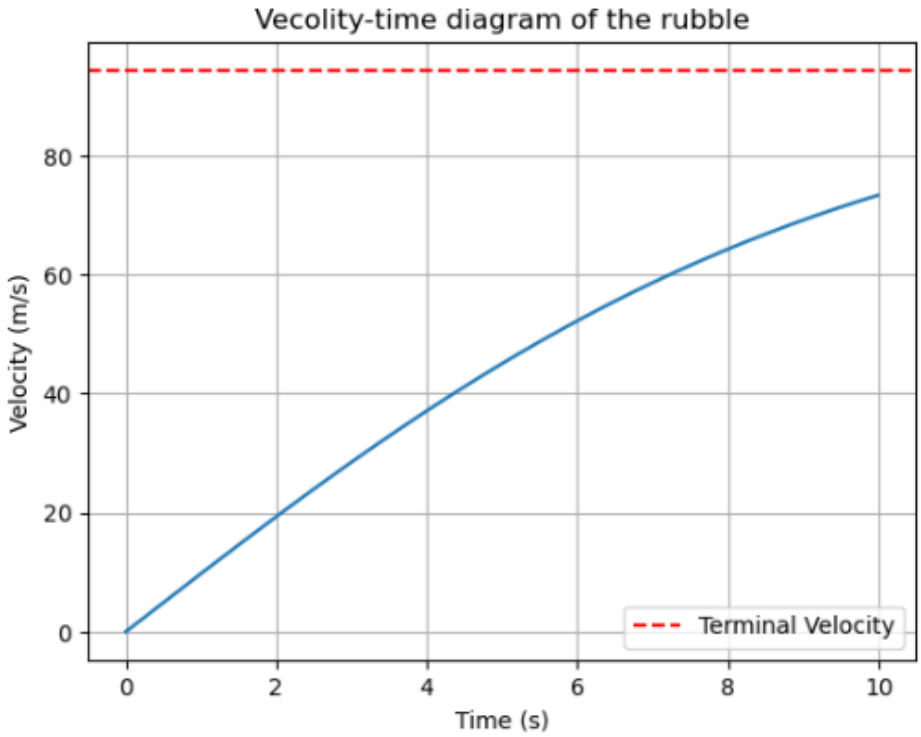

Figure 10 The velocity-time graph of the falling rubble

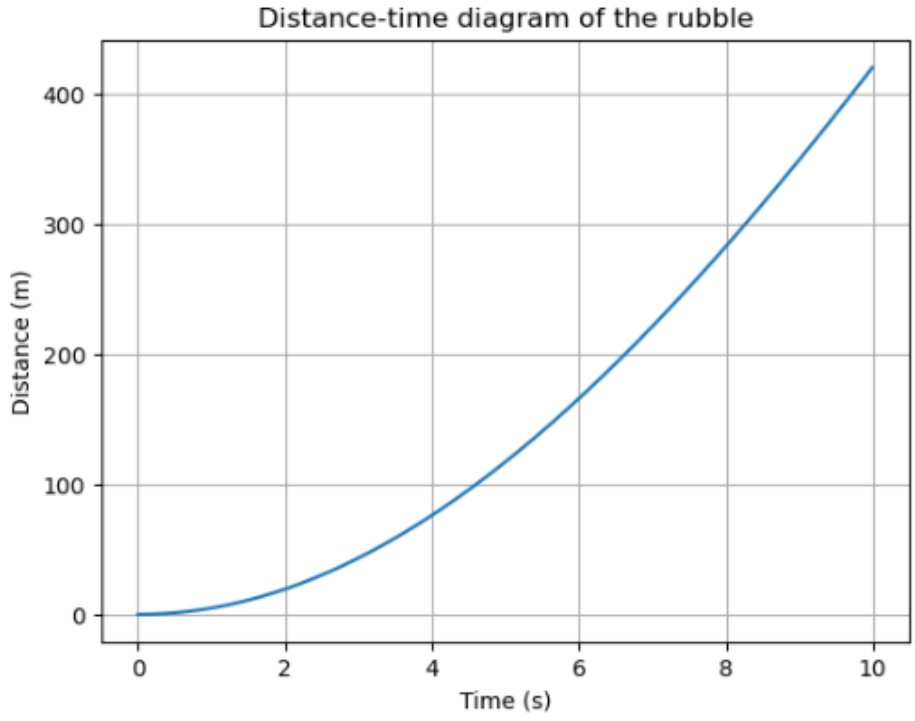

Figure 11 The distance-time graph of the falling rubble

The derivation of the eventual equation of motion

When a force is applied to a mass, the mass starts moving. This movement is caused by the force that pulls the mass downwards. This means that the mass generates a kinetic energy while moving. The kinetic energy can be calculated with the following formula.

$$E_k = \frac{1}{2}m\dot{x}^2$$

In this formula m represents the mass of the element and $\dot{x}$ the velocity of the element (Van Dalen & Hendrikse, 2024).

Energy can never be created or destroyed and since there is kinetic energy in this system, there must also be potential energy. The potential energy of the mass decreases the larger x is. This means that when the mass is moving downwards, the potential energy of the mass decreases. The formula is given below.

$$E_{p,mass} = -mgx$$

The potential energy of the spring and damper is given by Hook's law. The formula is presented below (Fitzpatrick, 2006)

$$E_{p,spring} = \frac{1}{2}kx^2$$

The damper generates an upward force when the mass is set into motion. The damping force dissipates the energy released by the spring, preventing the system from oscillating indefinitely. The expression of the damper force is given below (Moore, 2021)

$$F_{damper} = c\dot{x}$$

The impact force is also present in this model. This force is denoted as $F(t)$.

The energy and force formulas are needed to set up the equation of motion. This is done with the Lagrangian formalism. The derivation of the equation of motion is presented below (Van Dalen & Hendrikse, 2024).

$$L = K - P$$

$$K = \frac{1}{2}m\dot{x}^2$$

$$P = -mgx + \frac{1}{2}kx^2$$

$$\frac{d}{dt}\frac{dL}{d\dot{x}} - \frac{dL}{dx} = -c\dot{x} + F(t)$$

Solving the Lagrangian formalism gives the following equation of motion:

$$m\ddot{x} + c\dot{x} + kx = mg + F(t)$$

In this equation, we must consider that due to the mass of the element, the spring will stretch a bit statically. The force created in the spring due to the mass hanging on it is the same as the gravitational force of the mass. x_0 is the static displacement. The kx relation can also be rewritten to include the static and dynamic displacement (Davis, 2005).

$$mg = kx_0$$

$$kx = k(x_{dyn} + x_0)$$

With this relation we can rewrite the equation of motion to exclude the static displacement. The new equation of motion can be seen below. $x_{dyn} = x$ in this equation.

$$m\ddot{x} + c\dot{x} + kx = F(t)$$