Assignment

Assignment 2 is a computer exercise using the finite element method and consists of one part only. Analyse the plate shown below. The load is perpendicular to its surface in the direction of the *z* axis.

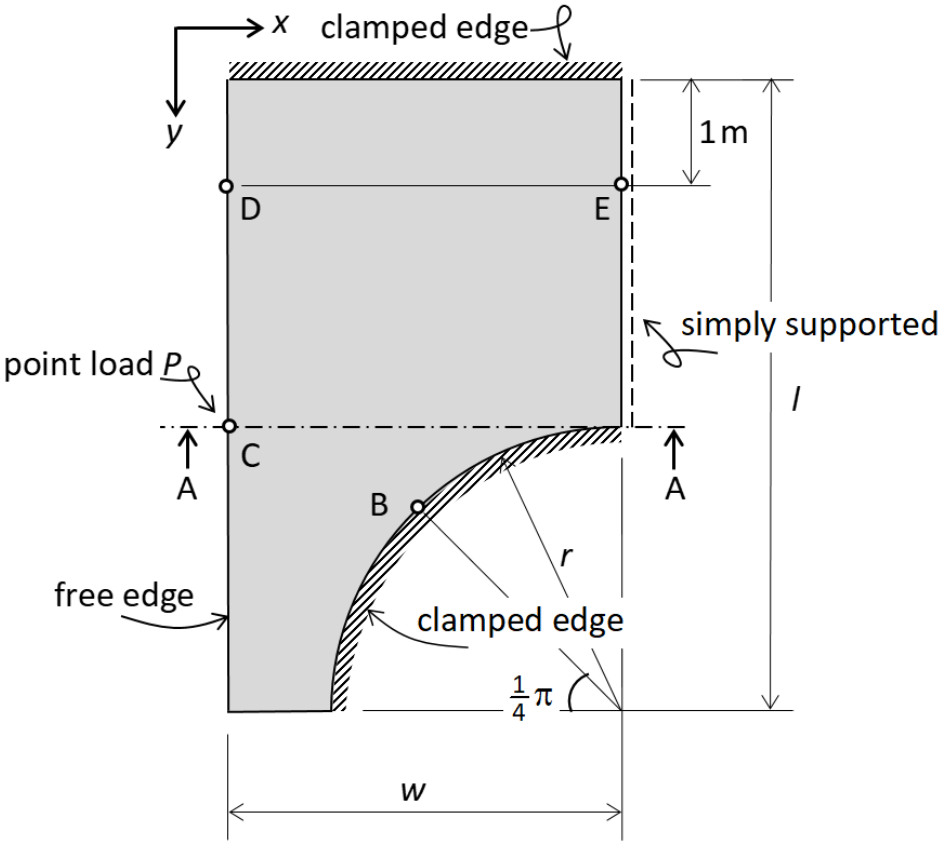

Symbol	Description
l	plate length
w	plate width
r	radius
t	plate thickness

Symbol	Description
E	Young's modulus
v	Poisson's ratio
p	uniformly distributed load
P	point load

- Do not apply self-weight. (Self-weight is included in the distributed load).
- Use a linear elastic isotropic material model.
- Use 4-node plane stress elements, i.e. linear shape functions.
- Choose the appropriate plate theory (Kirchhoff or Mindlin-Reissner).
- Choose an appropriate element size.
- Parameters and computation results may be unrealistic in magnitude. This is not a problem since this is a linear elastic analysis.

Parameters

The values for the various parameters can be obtained by filling in your student ID number in the attached MS Excel file (download first).

A report of two pages

You are asked to write a report of two pages. Please use this template (download first). Submit the report in Brightspace before the due date.

- The deformed model from an appropriate point of view. Indicate the location and value of the maximum displacement.
- A contour plot of m_{xy}. Select an appropriate plot scale. Mention whether m_{xy} is averaged in the nodes or not.
- A graph of m_{xx} , m_{yy} and m_{xy} in section A-A. Discuss the values in remarkable locations.
- A graph of v_x and v_y in section A-A. Discuss the values in remarkable locations.

Data Summary

Apart from making and submitting your report, you are also requested to submit the following data in this form:

- deflection at point C (point load) in mm,
- computed value of moment m_{xx} at point D in kNm/m,
- exact value of moment m_{xx} at point D in kNm/m,
- value of moment m_{xy} at point B in kNm/m,
- value of principal moment m_1 at point B in kNm/m,
- value of principal moment m_2 at point B in kNm/m,
- computed value of the ratio m_2 / m_1 at point B,
- exact value of the ratio m_2 / m_1 at point B,
- value of the concentrated shear force V at point D in kN,
- value of principal shear force v_n at point E in kN/m.

Submitting your assignment

Before the due time and date:

1. Submit the two-page PDF document via Brightspace.
2. Submit your "data summary" via this form.

That is, submitting your assignment requires two actions! See Brightspace for the due time and date.