Ct 4180

Plate analysis, theory and application

Volume 1, Theory

November 2006

Prof.dr.ir. J. Blaauwendraad

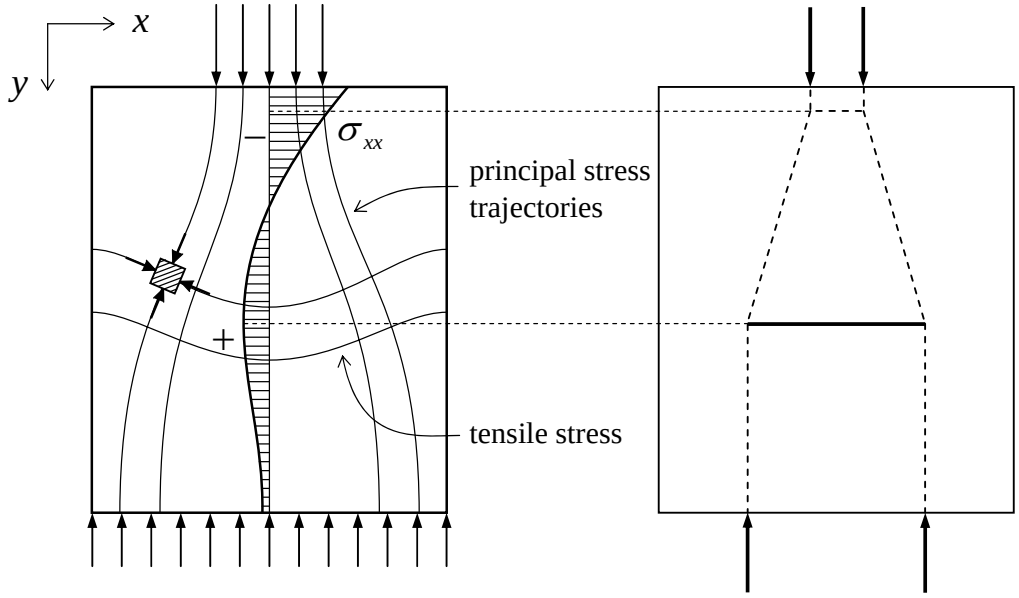

Faculty of Civil Engineering and Geosciences
Department of Mechanics, Materials and Structures
Section of Structural Mechanics

Delft University of Technology
Faculty of Civil Engineering and Geosciences

Plate analysis, theory and application

Volume 1, Theory

Prof.dr.ir. J. Blaauwendraad

November 2006

Ct 4180

Table of contents

Preface 5

1 Theory of plates loaded in their plane 7
1.1 Introduction: special case of a plate, the truss 8
1.2 Problem statement for plates 10
1.3 Basic equations 11
1.4 The displacement method 16
1.5 Boundary conditions 18
1.6 Exercises 19

2 Applications of the plate theory 21
2.1 Solutions in the form of polynomials 21
2.1.1 Constant and linear terms 21
2.1.2 Quadratic terms 26
2.1.3 Third-order terms 29
2.2 Solution for a deep beam or shear wall. 33
2.3 Other examples 37
2.4 Stresses, transformations and principal stresses 40
2.5 Processing of stress results 41

3 Thick plates loaded perpendicularly to their plane 45
3.1 Introduction: special case of a plate, the beam 45
3.2 Theory for thick plates 52
3.2.1 Problem definition 52
3.2.2 Suppositions 54
3.2.3 Basic equations 55
3.2.4 Differential equations for thick plates 64

4 Thin plates loaded perpendicular to their plane 67
4.1 Theory for thin plates 67
4.2 Transformation rules and principal moments 71
4.3 Principal shear forces 72
4.4 Boundary conditions for thin plates 74
4.4.1 Clamped edge for thin plates 74
4.4.2 Simply supported edge for thin plates 75
4.4.3 Free edge for thin plates 79
4.4.4 Sudden change in thickness in a thin plate 80

5 Applications of the thin plate theory 83
5.1 Basic cases for bending 83
5.2 Panel with constant torsion 85
5.3 Sinusoidal load on a square plate 86
5.4 Plate simply-supported at two opposite edges with a sinusoidal line load on one free edge 92
5.5 Handling the stress results 94

References 95

Preface

The course “Plate analysis, theory and application” (Ct 4180) is part of the Master Curriculum of the Faculty Civil Engineering and Geosciences. In general plates are two-dimensional structures, which can be loaded in two different ways. In this course the word ‘plate” is reserved for plate structures, which are loaded in their plane. The state of plane stress in such structures consists of membrane forces. Shear-walls belong to this class of problems, but also deep beams, beam webs with holes and other structures of this kind.
The word “slab” will be used for the other type of plates, which are loaded perpendicular to their plane. The stress state in slabs consists of bending moments and shear forces.

The lecture notes consist of two volumes with titles “Theory” and “Numerical Methods”. This present volume regards “Theory” and covers the theory of plates and slabs, presents differential equations and includes a number of exact solutions. The “Numerical Methods” are covered in a separate volume, which deals with approximating techniques on basis of the direct stiffness method for both Plates and Slabs. This volume fits in with commercial software for the analysis of plates and slabs.

It is a principal idea of the lecture notes that first the classical theory should be presented and must be understood before the numerical methods can be judged for its value. The theoretical part creates understanding and insight and provides a basis for the discussion of the numerical methods. Two different theories for slabs are discussed: the theory for thick plates and the theory for thin plates. This is done because commercial software packages offer both options.

In conventional books a different theory is applied for plates if compared to slabs. For plates loaded in plane a differential equation is derived in the flexibility approach (leading to a differential equation for a stress function) and for slabs loaded perpendicular to plane a stiffness approach is applied (leading to a differential equation for the displacement). In this volume “Theory” we quit with this approach. The decision has been made to apply the stiffness approach for both plates and slabs. This has been done by purpose in order to fit in with modern computational methods. Then no difference exists for plates and slabs, because both structure types are computed in the framework of the direct stiffness method.

The volume “Theory” has been restructured in 2003. A refreshed volume “Numerical Methods” will be at disposal in the course of 2004. I am thankful to Kelly Greene, student of the Faculty of Architecture, for her rewarded contribution to a correct English text and I am much indebted to dr.ir. C. Sitters, who was in control of the translation of existing parts of lecture notes, correctly processed new parts, produced clear pictures and accurately handled the composition of all parts. His cooperation and care guarantees wonderful lecture notes.

J. Blaauwendraad
July 2003

1 Theory of plates loaded in their plane

The word *plate* (in Dutch *plaat*) is a collective term for systems in which there is a transfer of forces in two directions, for example, walls, deep beams, floors and viaducts. In the broad sense also cable structures and membranes belong to this category.
We distinguish two main categories, being plates that are loaded in their plane (in Dutch also called *schijven*) and plates that are loaded perpendicularly to their plane. For both main categories an approach with differential equations is given initially, such that a basic understanding is procured and for certain characteristic cases an exact solution can be determined. The most important numerical method, the *Finite Element Method* (FEM), will be discussed in a separate volume of the lecture notes. The approach of the displacement method (also called stiffness method) is followed both working with the differential equations as well as with the numerical method.

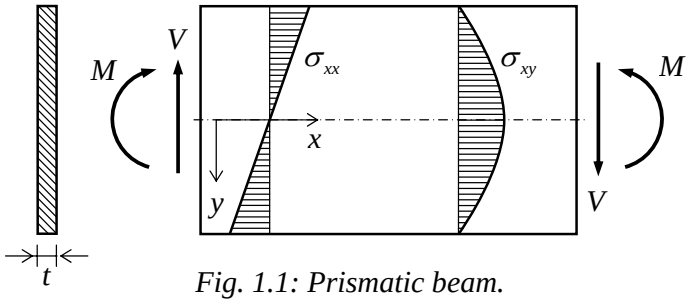

Fig. 1.1: Prismatic beam.

In flat plates that are loaded in their plane, the state of stress is called *plane stress*. All stress components are parallel to the mid-plane of the plate. In many cases the stresses in a certain point can simply be determined, as for example is the case with the bending stresses σ_{xx} and the shear stresses σ_{xy} in a prismatic slender beam of rectangular cross-section with width t loaded by bending moments and shear forces as shown in Fig. 1.1.
However, less simple are some other cases like a deep beam or wall (Fig. 1.2). In a deep beam the stress distribution differs from what the classic beam theory predicts. The bending stress

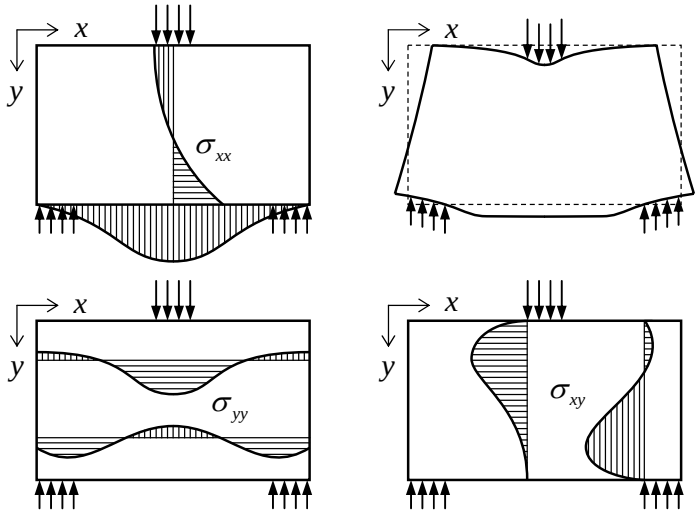

Fig. 1.2: Example of the deformation and stress distribution in a deep beam.

σ_{xx} is no longer linear and the beam theory doesn't give any information about the vertical normal stresses σ_{yy}, but they do of course occur. Finally the shear stresses σ_{xy} in a deep beam do not have a parabolic distribution, as the beam theory would yield. This chapter will offer a solution method for such general problems.

1.1 Introduction: special case of a plate, the truss

In this chapter we deal with a group of problems that we can consider to be two-dimensional. Plane stress occurs in a thin flat plate, which is loaded in its plane by a perimeter load f or/and a distributed load p over the plate (see Fig. 1.3).

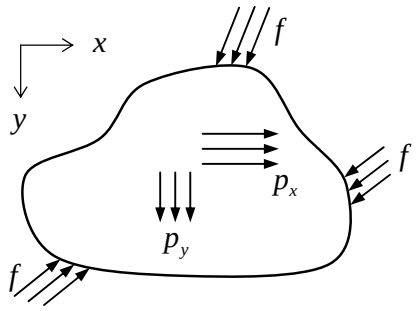

Fig. 1.3: Thin flat plate loaded in-plane.

For reference reasons we will recall the special case of a plate here, on which a load is applied in one direction, for example in the direction of the x-axis.
Fig. 1.4 shows this uniaxial situation. In fact it is a truss. The x-axis is chosen from left to right. In the position x, the cross-section displaces $u(x)$ in x-direction after applying the load, which displacement is accompanied with a specific strain ε.

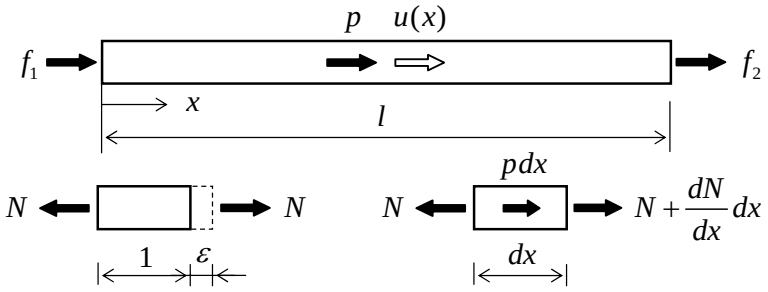

Fig. 1.4: Bar subjected to extension with relevant quantities.

The truss with length l is loaded along its length with a distributed load $p(x)$ per unit length and at both ends with forces f_1 and f_2. The cross-section of the truss has an area A. The modulus of elasticity of the material is E. The stress resultant in the cross-section is the normal force N. For this problem three basic equations can be derived between the quantities u, ε, N and p as is shown in Fig. 1.5.
The three relations are:

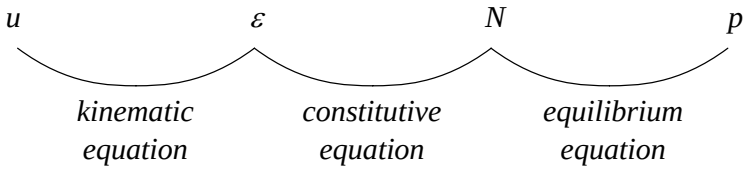

Fig. 1.5: Diagram displaying the relations between the quantities u , ε , N and p.

$$\varepsilon = \frac{du}{dx} \qquad (\textit{kinematic equation}) \tag{1.1a}$$

$$N = EA\varepsilon \qquad (\textit{constitutive equation}) \tag{1.1b}$$

$$-\frac{dN}{dx} = p \qquad (\textit{equilibrium equation}) \tag{1.1c}$$

Substitution of the kinematic equation in the constitutive law and the so changed constitutive in the equilibrium equation transforms this equation into:

$$-EA\frac{d^2u}{dx^2} = p \tag{1.2}$$

This second-order differential equation can be solved if two boundary conditions are specified, one on the left end and one on the right end. At position $x = 0$ the boundary condition either is:

$$u_1 = u_1^0 \tag{1.3a}$$

in which u_1^0 is a prescribed value, or:

$$-N_1 = f_1 \quad \rightarrow \quad -EA\left(\frac{du}{dx}\right)_1 = f_1 \tag{1.3b}$$

At $x = l$ the boundary condition is either:

$$u_2 = u_2^0 \tag{1.4a}$$

or:

$$N_2 = f_2 \quad \rightarrow \quad EA\left(\frac{du}{dx}\right)_2 = f_2 \tag{1.4b}$$

From the differential equation in (1.2) and the boundary conditions in (1.3) and (1.4), the displacements $u(x)$ can be solved. When the solution $u(x)$ has been obtained, the normal force N can be calculated from (1.1).
The method stated here is known as *displacement method* or *stiffness method*.
The plate problem with a load in two directions can be solved along similar lines.

1.2 Problem statement for plates

Of a plate loaded in its plane every point (x, y) undergoes a displacement $u_x(x, y)$ in the direction of the x-axis and a displacement $u_y(x, y)$ in the direction of the y-axis (see Fig. 1.6). The displacement field is fixed with two degrees of freedom. That means that in these

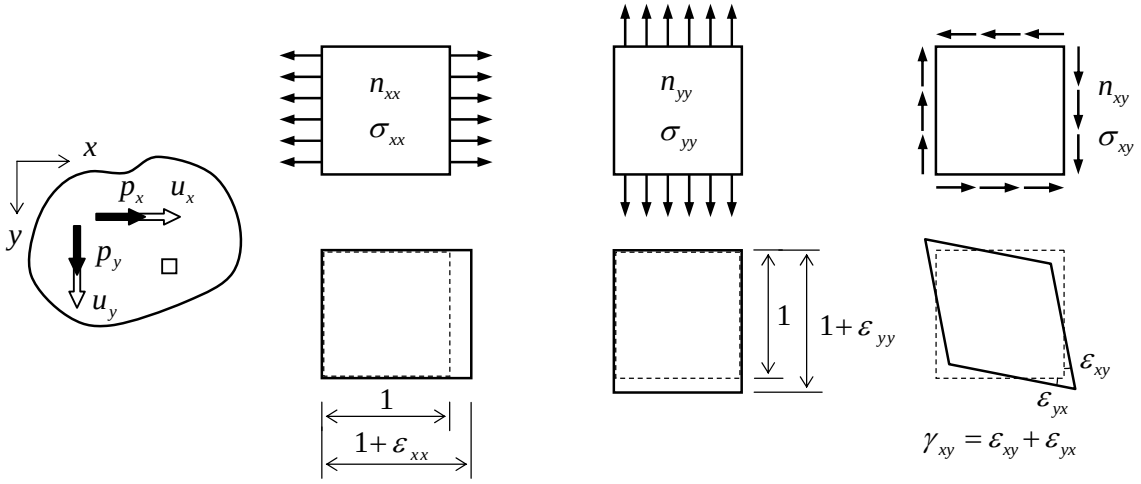

Fig. 1.6: Quantities which play a role in a plate loaded in-plane; the quantities drawn are positive.

two directions distributed external loads p_x and p_y can be applied per unit area. Internally three deformations occur, a strain ε_{xx} in the x-direction, a strain ε_{yy} in the y-direction, and a shear strain γ_{xy}. This conjugates with the stresses σ_{xx}, σ_{yy} and σ_{xy}, respectively (see Fig. 1.6).

The sign convention is: the stress component is *positive* if acting in *positive* coordinate direction on a plane with the normal vector in *positive* coordinate direction, or if it points towards *negative* coordinate direction on a plane with its normal in *negative* coordinate direction (see Fig. 1.6).

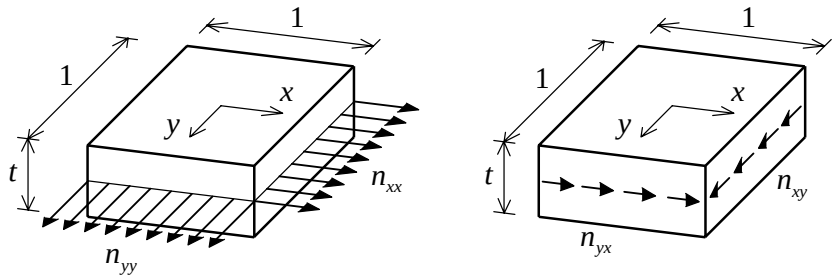

Fig. 1.7: The extensional forces that are used by the designer for the judgement of the strength of a plate.

Common practice, especially for plates loaded in their plane, is to multiply the stresses by the plate thickness t. The thus acquired *extensional forces* or *membrane forces* n_{xx}, n_{yy}, and n_{xy} are the stress resultants per unit plate width, having the dimension force per unit length (see Fig. 1.7). Relations can be defined between the formerly mentioned quantities and the stress and strain quantities as is shown in the diagram in Fig. 1.8 for plates in extension.

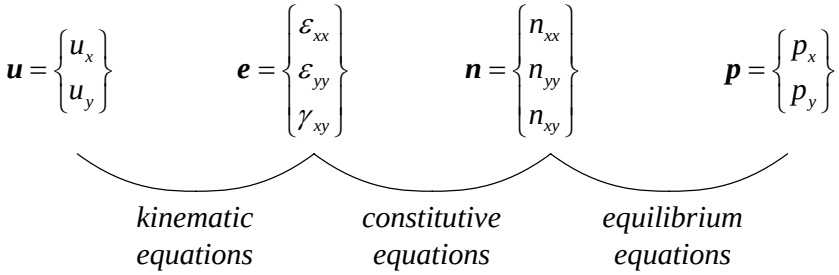

Fig. 1.8: Diagram displaying the relations between the quantities playing a role in the analysis of a plate loaded in plane.

1.3 Basic equations

We will formulate the three categories of basic equations in the following order: *kinematic equations, constitutive equations* and *equilibrium equations.*

Kinematic equations
We consider an elementary rectangular plate particle with the measurements dx and dy in an unloaded state. After applying a load, this particle is displaced and deformed. The new state can be established by three rigid body displacements and three deformations. The three rigid body displacements are (also see Fig. 1.9a):

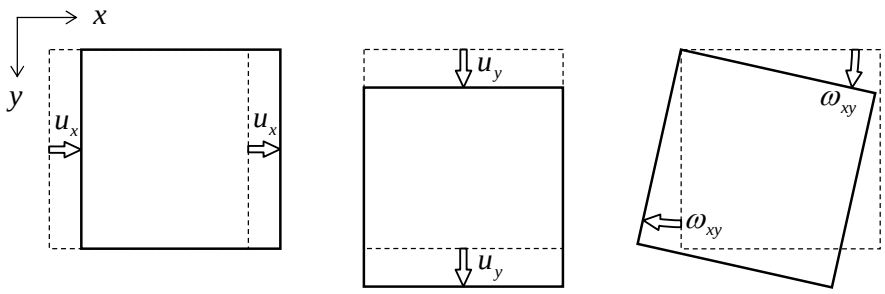

Fig. 1.9a: The three rigid body displacements.

- a translation in the x-direction; this is the horizontal displacement of the left-hand top corner (u_x).
- a translation in the y-direction; this is the vertical displacement of the left-hand top corner (u_y).
- a rotation of the elementary particle about the left-hand top corner (ω_{xy}). The rotation is positive when it takes place in the direction from the x-axis towards the y-axis in the first quadrant.

The three deformations are (also see Fig. 1.9b):
- a specific strain ε_{xx} in the x-direction; this is positive when elongation is involved.
- a specific strain ε_{yy} in the y-direction; this is positive when elongation is involved.
- a shear deformation γ_{xy}; this deformation changes a square shape into a diamond shape, such that the diagonal coinciding with the bisector of the first quadrant

becomes larger and the perpendicular diagonal shorter (see the right drawing of Fig.1.9b); the magnitude of γ_{xy} indicates the angular deviation of the initially right angle.

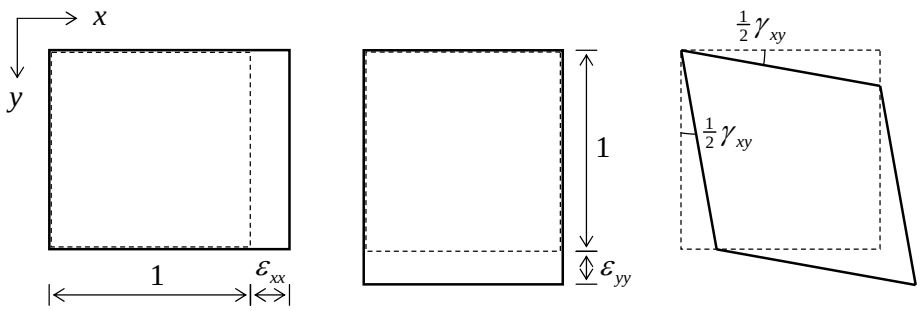

Fig. 1.9b: The three deformations.

The rigid body displacements are strainless movements and therefore occur without generating any stresses. However the deformations are associated with strains and do create stresses. The kinematic equations define the relation between the displacements and the strains. The effect of the displacement field is shown in Fig. 1.10. A square $ABCD$ in unloaded state transforms into the quadrilateral $A'B'C'D'$ after application of the load. According to the definitions of Fig. 1.6 the following relations are valid:

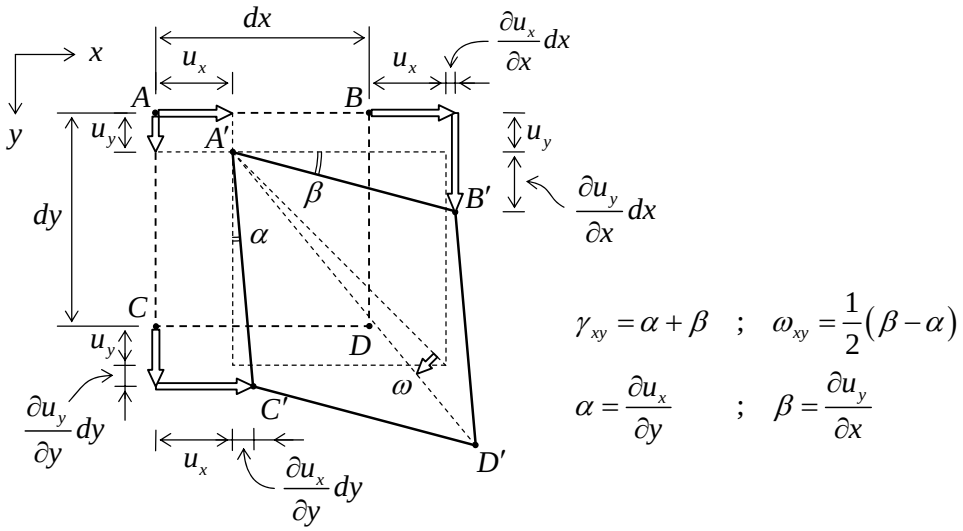

Fig. 1.10: Displaced and deformed state of an elementary plate part.

$$\begin{aligned} \varepsilon_{xx} &= \frac{\partial u_x}{\partial x} \\ \varepsilon_{yy} &= \frac{\partial u_y}{\partial y} \\ \gamma_{xy} &= \frac{\partial u_x}{\partial y} + \frac{\partial u_y}{\partial x} \end{aligned}$$

(*kinematic equations*) (1.5)

Equation (1.5) is a generalisation of equation (1.1a) for the truss. Instead of the change γ_{xy} of the right angle, also a halved change $\varepsilon_{xy}(=\varepsilon_{yx})$ can be used:

$$\varepsilon_{xy} = \frac{1}{2}\left(\frac{\partial u_x}{\partial y} + \frac{\partial u_y}{\partial x} \right) \tag{1.6}$$

This has an advantage when the tensor notation is used. Because these lecture notes use vector and matrix notations, we will use γ_{xy}. From Fig. 1.10 we may also deduce the determination of the rotation ω_{xy} from the displacements u_x and u_y:

$$\boxed{\omega_{xy} = \frac{1}{2}\left(-\frac{\partial u_x}{\partial y} + \frac{\partial u_y}{\partial x} \right)} \qquad (\textit{rotation}) \tag{1.7}$$

Constitutive equations

The constitutive equations give us information about the material behaviour, by providing the relation between the stresses and the strains. Hooke's law is considered in its most general form for linear-elastic materials. In Fig. 1.11 the different (positive) stresses are indicated.

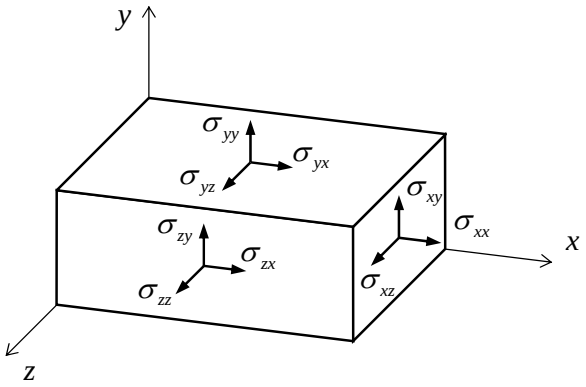

Fig. 1.11: Stresses in three dimensions.

Between the six stresses and the six strains that can occur in the general case of a three-dimensional continuum, the following relations are valid:

$$\begin{aligned}
\varepsilon_{xx} &= \frac{1}{E}\sigma_{xx} - \frac{\upsilon}{E}\left(\sigma_{yy} + \sigma_{zz}\right) \quad ; \quad \gamma_{xy} = \frac{2\left(1+\upsilon\right)}{E}\sigma_{xy} \\
\varepsilon_{yy} &= \frac{1}{E}\sigma_{yy} - \frac{\upsilon}{E}\left(\sigma_{zz} + \sigma_{xx}\right) \quad ; \quad \gamma_{yz} = \frac{2\left(1+\upsilon\right)}{E}\sigma_{yz} \\
\varepsilon_{zz} &= \frac{1}{E}\sigma_{zz} - \frac{\upsilon}{E}\left(\sigma_{xx} + \sigma_{yy}\right) \quad ; \quad \gamma_{zx} = \frac{2\left(1+\upsilon\right)}{E}\sigma_{zx}
\end{aligned} \tag{1.8}$$

Here E is Young's modulus and υ is the lateral contraction coefficient (also known as Poisson's ratio). Of the three relations on the right-hand side only the first is relevant for plates loaded in their plane:

$$\gamma_{xy} = \frac{2(1+\upsilon)}{E}\sigma_{xy} \tag{1.9}$$

This follows directly from the definition of such a plate. Of the three relations on the left-hand side the third will have to vanish. This is possible because the stresses σ_{zz} have to be eliminated from the first two. Following the definition of plane stress the stress σ_{zz} is zero. Then, the first two relations of (1.8) can be simplified to:

$$\begin{aligned} \varepsilon_{xx} &= \frac{1}{E}\left(\sigma_{xx} - \upsilon\,\sigma_{yy}\right) \\ \varepsilon_{yy} &= \frac{1}{E}\left(\sigma_{yy} - \upsilon\,\sigma_{xx}\right) \end{aligned} \tag{1.10}$$

The third equation becomes $\varepsilon_{zz} = \upsilon\left(\sigma_{xx} + \sigma_{yy}\right)/E$ and expresses how the plate in the direction perpendicular to its plane dilates or contracts when subjected to the stresses σ_{xx} and σ_{yy} in its plane. This is superfluous information, which we will not use. In the three relations of (1.9) and (1.10) the stresses can be replaced by the tensile forces n_{xx}, n_{yy} and n_{xy} (stresses times the thickness). In matrix notation the three relations then read:

$$\begin{Bmatrix} \varepsilon_{xx} \\ \varepsilon_{yy} \\ \gamma_{xy} \end{Bmatrix} = \frac{1}{E\,t}\begin{bmatrix} 1 & -\upsilon & 0 \\ -\upsilon & 1 & 0 \\ 0 & 0 & 2(1+\upsilon) \end{bmatrix}\begin{Bmatrix} n_{xx} \\ n_{yy} \\ n_{xy} \end{Bmatrix} \quad (\textit{constitutive equations in flexibility formulation}) \tag{1.11}$$

This is the flexibility formulation of the constitutive equations:

$$\boldsymbol{e} = \boldsymbol{C}\,\boldsymbol{n} \tag{1.12}$$

By inverting (1.11) the stiffness formulation is found:

$$\begin{Bmatrix} n_{xx} \\ n_{yy} \\ n_{xy} \end{Bmatrix} = \frac{E\,t}{1-\upsilon^2}\begin{bmatrix} 1 & \upsilon & 0 \\ \upsilon & 1 & 0 \\ 0 & 0 & (1-\upsilon)/2 \end{bmatrix}\begin{Bmatrix} \varepsilon_{xx} \\ \varepsilon_{yy} \\ \gamma_{xy} \end{Bmatrix} \quad (\textit{constitutive equations in stiffness formulation}) \tag{1.13}$$

or in short:

$$\boldsymbol{n} = \boldsymbol{D}\,\boldsymbol{e} \tag{1.14}$$

In a slightly different form this is worked out in Fig. 1.12. Equation (1.13) is a generalisation of equation (1.1b) for the truss.

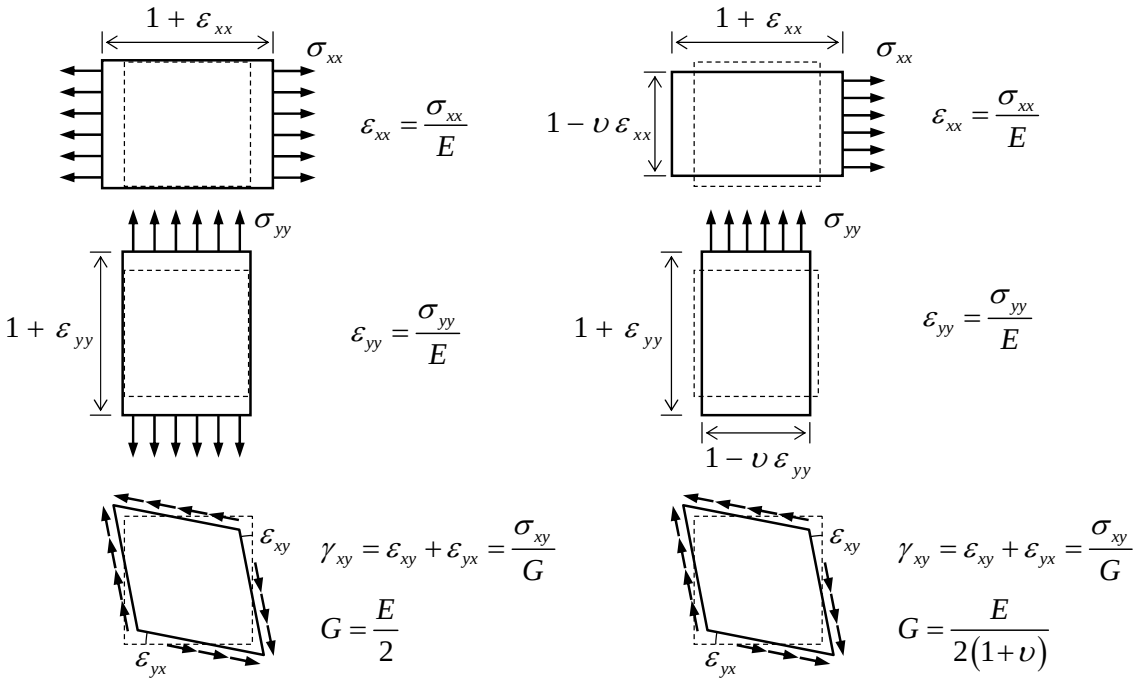

Material without lateral contraction *Material with lateral contraction*

Fig. 1.12: Stress-strain relations.

Equilibrium equations

Equilibrium equations give the relations between the loads and the stress resultants. An equilibrium equation can be formulated in the direction of both degrees of freedom u_x and u_y (see Fig. 1.13). In the x-direction the equation is as follows:

$$-n_{xx}\,dy+\left(n_{xx}+\frac{\partial n_{xx}}{\partial x}dx\right)dy-n_{yx}\,dx+\left(n_{yx}+\frac{\partial n_{yx}}{\partial y}dy\right)dx+p_x\,dx\,dy=0$$

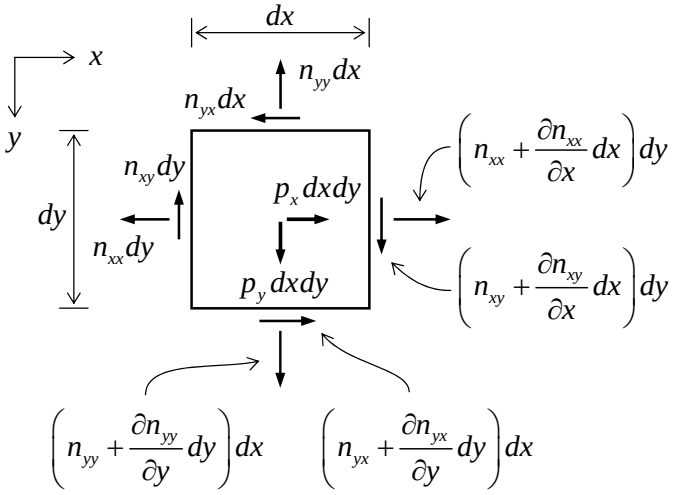

Fig. 1.13: Equilibrium of an elementary plate particle.

In the y-direction a similar equation is valid that is obtained by simply interchanging all x and y. Some terms are cancelled out. Then division through $dx\,dy$ leads to:

$$\boxed{\begin{aligned} -\left(\frac{\partial n_{xx}}{\partial x}+\frac{\partial n_{yx}}{\partial y}\right) &= p_x \\ -\left(\frac{\partial n_{yy}}{\partial y}+\frac{\partial n_{xy}}{\partial x}\right) &= p_y \end{aligned}} \qquad (\textit{equilibrium equations}) \qquad (1.16)$$

Equation (1.16) is a generalisation of equation (1.1c) for the truss. All basic equations have been determined now.

Remark
Without explicitly being mentioned every time, the derivations of the basic equations are valid for a homogenous isotropic plate. The plate theory is also used for homogenous

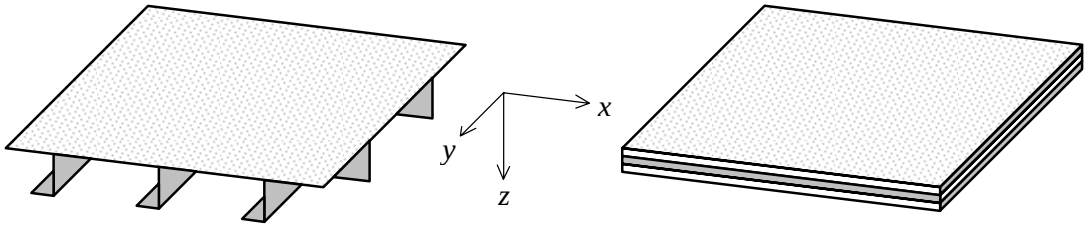

Fig. 1.14: Orthotropic plates.

orthotropic plates or structures that may be considered as being such (Fig. 1.14).
Then more generally it holds:

$$\begin{Bmatrix} n_{xx} \\ n_{yy} \\ n_{xy} \end{Bmatrix} = \begin{bmatrix} D_{xx} & D_{\upsilon} & 0 \\ D_{\upsilon} & D_{yy} & 0 \\ 0 & 0 & D_{xy} \end{bmatrix} \begin{Bmatrix} \varepsilon_{xx} \\ \varepsilon_{yy} \\ \gamma_{xy} \end{Bmatrix} \quad \text{or} \quad \boldsymbol{n} = \boldsymbol{D}\,\boldsymbol{e} \qquad (1.17)$$

The stiffness terms in (1.17) will have to be determined separately for each case, depending on the structure of the plate field.

1.4 The displacement method

In the displacement method, the kinematic equations and the constitutive equations will be substituted in the equilibrium equations. This will be done in two steps. First the kinematic equations (1.2) will be introduced into the constitutive equations (1.13), so the extensional forces are expressed in the displacements:

$$
\begin{aligned}
n_{xx} &= \frac{Et}{1-\upsilon^2}\left(\frac{\partial u_x}{\partial x}+\upsilon\frac{\partial u_y}{\partial y}\right)\\
n_{yy} &= \frac{Et}{1-\upsilon^2}\left(\frac{\partial u_y}{\partial y}+\upsilon\frac{\partial u_x}{\partial x}\right)\\
n_{xy} &= \frac{Et}{2(1+\upsilon)}\left(\frac{\partial u_x}{\partial y}+\frac{\partial u_y}{\partial x}\right)
\end{aligned}
\tag{1.18}
$$

The second step is substituting this intermediate result into the equilibrium equations (1.16), which results in two partial differential equations in u_x and u_y (the Navier equations):

$$
\begin{aligned}
-\frac{Et}{1-\upsilon^2}\left(\frac{\partial^2 u_x}{\partial x^2}+\frac{1-\upsilon}{2}\frac{\partial^2 u_x}{\partial y^2}+\frac{1+\upsilon}{2}\frac{\partial^2 u_y}{\partial x\partial y}\right) &= p_x\\
-\frac{Et}{1-\upsilon^2}\left(\frac{\partial^2 u_y}{\partial y^2}+\frac{1-\upsilon}{2}\frac{\partial^2 u_y}{\partial x^2}+\frac{1+\upsilon}{2}\frac{\partial^2 u_x}{\partial x\partial y}\right) &= p_y
\end{aligned}
\tag{1.19}
$$

These equations are the generalisation of differential equation (1.2) for the truss problem. If there are no variations in the y-direction, the first differential equation becomes equal to (1.2) if one substitutes $t = A$ and $\upsilon = 0$.
To be complete, we will write (1.19) in a matrix operator formulation:

$$
-\frac{Et}{1-\upsilon^2}\begin{bmatrix}
\frac{\partial^2}{\partial x^2}+\frac{1-\upsilon}{2}\frac{\partial^2}{\partial y^2} & \frac{1+\upsilon}{2}\frac{\partial^2}{\partial x\partial y}\\
\frac{1+\upsilon}{2}\frac{\partial^2}{\partial x\partial y} & \frac{\partial^2}{\partial y^2}+\frac{1-\upsilon}{2}\frac{\partial^2}{\partial x^2}
\end{bmatrix}\begin{Bmatrix} u_x \\ u_y \end{Bmatrix} = \begin{Bmatrix} p_x \\ p_y \end{Bmatrix}
\tag{1.20}
$$

The matrix of operators has to be symmetrical for the terms in which an even amount of differentiations occurs and skew symmetrical (opposite signs) for the terms with an uneven amount of differentiations. In our case, every term contains two differentiations, so the matrix is symmetrical.
In (1.20) we have derived two coupled partial differential equations in two unknown displacements u_x and u_y, which have to be solved simultaneously. We can replace the set of two-order differential equations by one of the fourth order, by elimination of one of the displacements. If we choose to eliminate u_y we must perform the following operation:

$$
\left(\frac{\partial^2}{\partial y^2}+\frac{1-\upsilon}{2}\frac{\partial^2}{\partial x^2}\right)
$$

on both members of the first equation in (1.20) and the operation:

$$
-\left(\frac{1+\upsilon}{2}\frac{\partial^2}{\partial x\partial y}\right)
$$

on the second equation. If we then sum up the two equations, the displacement u_y will disappear and a fourth-order differential equation for u_x is found:

$$-\frac{Et}{2(1+\upsilon)}\left(\frac{\partial^4}{\partial x^4}+2\frac{\partial^4}{\partial x^2\partial y^2}+\frac{\partial^4}{\partial y^4}\right)u_x=\left(\frac{\partial^2}{\partial y^2}+\frac{1-\upsilon}{2}\frac{\partial^2}{\partial x^2}\right)p_x-\left(\frac{1+\upsilon}{2}\frac{\partial^2}{\partial x\partial y}\right)p_y \tag{1.21}$$

Introducing the harmonic Laplace-operator ∇^2 (pronounce: nabla squared):

$$\nabla^2=\frac{\partial^2}{\partial x^2}+\frac{\partial^2}{\partial y^2} \tag{1.22}$$

we can rewrite (1.21) to:

$$\boxed{-\frac{Et}{2(1+\upsilon)}\nabla^2\nabla^2u_x=\left(\frac{\partial^2}{\partial y^2}+\frac{1-\upsilon}{2}\frac{\partial^2}{\partial x^2}\right)p_x-\left(\frac{1+\upsilon}{2}\frac{\partial^2}{\partial x\partial y}\right)p_y} \tag{1.23}$$

This is called a biharmonic equation.

1.5 Boundary conditions

The differential equations of (1.20) or equation (1.23) have to be solved taking into account the boundary conditions. To elucidate this problem we distinguish a part S_u of the edge on which displacements u have been specified and a part S_f where the load f is prescribed (see Fig. 1.15). Together S_u and S_f form the total perimeter. On S_u the prescribed

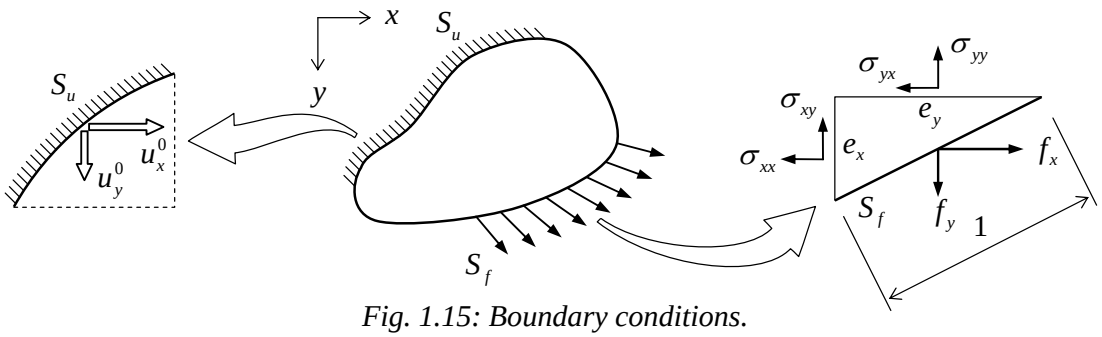

Fig. 1.15: Boundary conditions.

displacements are indicated by u_x^0 and u_y^0. The prescribed perimeter load generally consists of two components f_x and f_y. Both these distributed loads have the dimension force per unit of length. If u_x^0 is specified, f_x cannot be prescribed to that same part of the edge and vice-versa. The same is true for u_y^0 and f_y. However, it is possible for u_x^0 and f_y to be prescribed to the same part of the edge, as goes for u_y^0 and f_x simultaneously. A formal way of writing is:

$$\left.\begin{aligned}u_x&=u_x^0\\u_y&=u_y^0\end{aligned}\right\}\quad\text{on}\quad S_u \tag{1.24}$$

These are the *kinematic* boundary conditions. Where the perimeter load is given, we speak of *dynamic* boundary conditions. Prescribed values of the perimeter load are basically a condition for the stresses on the edge, for usually the following applies:

$$\left.\begin{aligned}\sigma_{xx}e_x + \sigma_{yx}e_y &= f_x \\ \sigma_{xy}e_x + \sigma_{yy}e_y &= f_y\end{aligned}\right\} \quad \text{on} \quad S_f \tag{1.25}$$

Here e_x and e_y are the components of the unit normal outward-pointing vector on the edge, see Fig. 1.15.

1.6 Exercises

1. Prescribe the two boundary conditions for every part of the edge of the structure shown in Fig. 1.16.

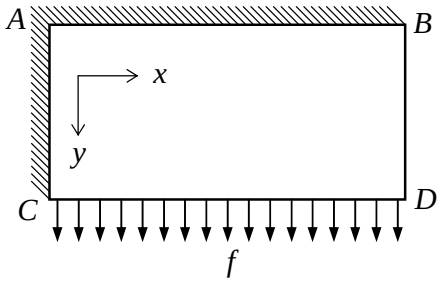

Fig. 1.16: Exercise on boundary conditions.

2. Give the boundary conditions for every part of the edge and the conditions for the transition zone between the two plate parts shown in Fig. 1.17.

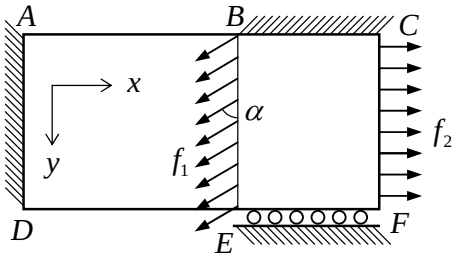

Fig. 1.17: Exercise on boundary conditions.

3. Repeat exercise 2, but now for the case that a distributed spring is applied (spring constant k) along the transition face as is represented in Fig. 1.18.

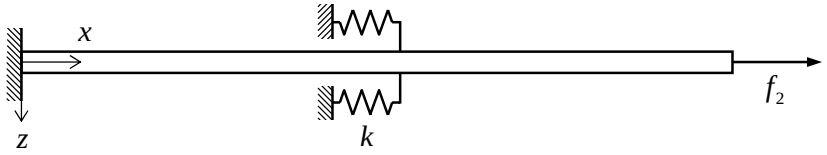

Fig. 1.18: Exercise on boundary conditions.

2 Applications of the plate theory

In this chapter solutions will be given for plates, which are loaded on their edges. This implies that no distributed forces p_x and p_y occur and the fourth-order biharmonic equation (1.23) can be reduced to the simple form:

$$\nabla^2\nabla^2 u_x = 0 \tag{2.1}$$

When a general solution has been found for u_x, the solution for u_y can be derived from the relation between u_x and u_y as given in (1.19). If we choose the first equation, the relation is (for $p_x = p_y = 0$):

$$\left(\frac{\partial^2}{\partial x^2} + \frac{1-\upsilon}{2}\frac{\partial^2}{\partial y^2}\right)u_x + \left(\frac{1+\upsilon}{2}\frac{\partial^2}{\partial x \partial y}\right)u_y = 0 \tag{2.2}$$

In these lecture notes we will demonstrate two types of solutions. In the first type solutions for the displacements u_x and u_y will be tried, which are written as polynomials of x and y. We will see that interesting problems can be solved through this "inverse method" approach. The second type of solutions is found by assuming a periodic distribution (sine or cosine) in one direction, then in the other direction an ordinary differential equation has to be solved. This approach is suitable for deep beams or walls.

2.1 Solutions in the form of polynomials

As a trial solution we choose:

$$u_x(x,y) = a_1 + a_2 x + a_3 y + a_4 x^2 + a_5 xy + a_6 y^2 + a_7 x^3 + a_8 x^2 y + a_9 xy^2 + a_{10} y^3 + a_{11} x^3 y + a_{12} xy^3 \tag{2.3}$$

$$u_y(x,y) = b_1 + b_2 x + b_3 y + b_4 x^2 + b_5 xy + b_6 y^2 + b_7 x^3 + b_8 x^2 y + b_9 xy^2 + b_{10} y^3 + b_{11} x^3 y + b_{12} xy^3 \tag{2.4}$$

All twelve polynomial terms in the expression for u_x are independent solutions of the differential equation (2.1), so the twelve coefficients a_i are independent of each other. The coefficients b_i in general will be dependent on the coefficients a_i according to (2.2).

In this section we start with the simple case that only constant and linear polynomial terms are chosen. After that a problem is solved for which we have to consider quadratic terms. Finally a problem will be solved for which we also have to include cubic terms.

2.1.1 Constant and linear terms

We consider the constant and linear terms with coefficients a_1, a_2, a_3, b_1, b_2, and b_3:

$$u_x(x,y) = a_1 + a_2 x + a_3 y \quad ; \quad u_y(x,y) = b_1 + b_2 x + b_3 y \tag{2.5}$$

Together the six terms determine all possible states of homogeneous strains and all possible rigid body displacements, as can easily be shown. Applying the kinematic relations (1.5) we find the strains:

$$\left.\begin{aligned}\varepsilon_{xx} &= a_2\\ \varepsilon_{yy} &= b_3\\ \gamma_{xy} &= a_3 + b_2\end{aligned}\right\} \qquad (\textit{homogeneous strain state}) \tag{2.6}$$

These strains are constant over the plate domain. The constants a_1 and b_1 do not appear in the strains at all. Those represent the rigid body translations. Of the constants a_3 and b_2 only the sum appears in the strains. The difference of these constants defines a rigid body rotation:

$$\left.\begin{aligned}u_x &= a_1\\ u_y &= b_1\\ \omega_{xy} &= \frac{1}{2}\left(-a_3 + b_2\right)\end{aligned}\right\} \qquad (\textit{rigid body movements}) \tag{2.7}$$

The homogenous strain state of (2.6) defines the stress resultants. From the constitutive law (1.13) we find:

$$\begin{aligned}\sigma_{xx} &= \frac{E}{1-\upsilon^2}\left(a_2 + \upsilon b_3\right)\\ \sigma_{yy} &= \frac{E}{1-\upsilon^2}\left(b_3 + \upsilon a_2\right)\\ \sigma_{xy} &= \frac{E}{2(1+\upsilon)}\left(a_3 + b_2\right)\end{aligned} \tag{2.8}$$

In the two following examples we will determine the three coefficients a_i and three coefficients b_i for some special cases.

Example 1 : Plate loaded uniaxially

A plate will be analysed, which is subjected to a constant (uniaxial) tensile stress σ in the x-direction (see Fig. 2.1). Now we need six conditions to solve the coefficients a_i and b_i. We know $\sigma_{xx} = \sigma$, $\sigma_{yy} = 0$ and $\sigma_{xy} = 0$, and we prescribe that no translations or rotations occur in the origin of the coordinate system.

Stresses:

$$\frac{E}{1-\upsilon^2}(a_2 + \upsilon b_3) = \sigma \quad ; \quad b_3 + \upsilon a_2 = 0 \quad ; \quad a_3 + b_2 = 0$$

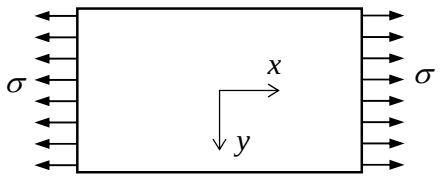

Fig. 2.1: Constant tensile stress.

Rigid body displacements, see (2.7):

$$a_1 = 0 \quad ; \quad b_1 = 0 \quad ; \quad -a_3 + b_2 = 0$$

From these six equations it follows:

$$a_1 = 0 \quad ; \quad a_2 = \frac{\sigma}{E} \quad ; \quad a_3 = 0$$

$$b_1 = 0 \quad ; \quad b_2 = 0 \quad ; \quad b_3 = -\upsilon \frac{\sigma}{E}$$

The displacement field (2.5) then becomes:

$$u_x = \frac{\sigma}{E} x \quad ; \quad u_y = -\upsilon \frac{\sigma}{E} y$$

The middle of the plate does not translate or rotate. So the left side of the plate moves towards the left and the right-hand side towards the right (see Fig. 2.2). In the lateral direction contraction takes place, which yields a negative displacement u_y for positive values for y, and a positive displacement u_y for negative values for y.

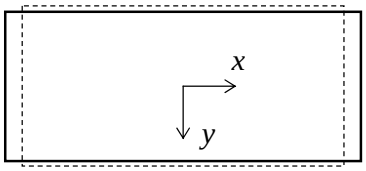

Fig. 2.2: Deformation without rigid body translation.

As an alternative we could have required the left side not to move. In that case a rigid body displacement u_0 has to be added (a displacement of the plate towards the right as shown in Fig. 2.3), and instead of $a_1 = 0$ we should choose $a_1 = u_0$.

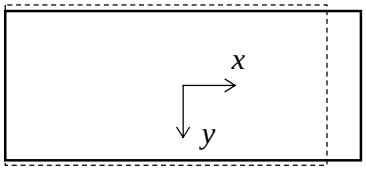

Fig. 2.3: Deformation with rigid body translation in x-direction.

Note:	We have two situations in an equal stress state, but each with a different displacement field. The difference consists of different rigid body displacements.

Example 2: Plate loaded in shear

We will consider the following example, which is a plate suffering pure shear σ (see Fig. 2.4). We assume no rigid body displacements a_1 and b_1 unequal zero. However, we take into account a rigid body rotation ω. The stresses are, see (2.8):

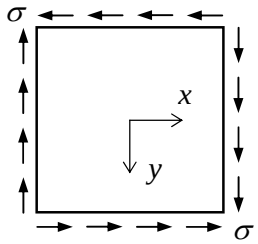

Fig. 2.4: Constant shear stress.

$$a_2 + \upsilon b_3 = 0 \quad ; \quad b_3 + \upsilon a_2 = 0 \quad ; \quad \frac{E}{2(1+\upsilon)}(a_3 + b_2) = \sigma$$

The rigid body displacements are, see (2.7):

$$a_1 = 0 \quad ; \quad b_1 = 0 \quad ; \quad \frac{1}{2}(-a_3 + b_2) = \omega$$

The solution of the first, second, fourth and fifth equation is:

$$a_1 = 0 \quad ; \quad a_2 = 0 \quad ; \quad b_1 = 0 \quad ; \quad b_3 = 0$$

So only two equations remain with coefficients a_3 and b_2:

$$\sigma = \frac{E}{2(1+\upsilon)}\left(a_3 + b_2\right) \quad ; \quad \omega = \frac{1}{2}\left(-a_3 + b_2\right)$$

And as a consequence the displacements will be:

$$u_x = a_3 y \quad ; \quad u_y = b_2 x$$

Now, we will consider three cases:

Case 1:
No rigid body rotation (see Fig. 2.5) is present. We choose:

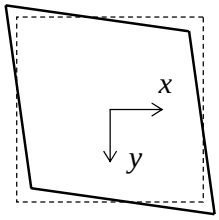

Fig. 2.5: Deformation without rigid body rotation.

$$\omega = 0 \quad \rightarrow \quad a_3 = b_2 = \frac{(1+\upsilon)\sigma}{E}$$

and so:

$$u_x = \frac{(1+\upsilon)\sigma}{E} y \quad ; \quad u_y = \frac{(1+\upsilon)\sigma}{E} x$$

The linear distribution of u_x in the y-direction and of u_y in the x-direction is confirmed by the deformation as shown in Fig. 2.5.

Case 2:
No displacement in the x-direction (see Fig. 2.6) takes place. The plate has vertical edges after a rigid body rotation. Now:

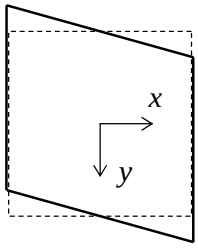

Fig. 2.6: Deformation with zero displacement in x-direction.

$$a_3 = 0 \quad \rightarrow \quad b_2 = \frac{2(1+\upsilon)\sigma}{E} \quad ; \quad \omega = \frac{(1+\upsilon)\sigma}{E}$$

and so:

$$u_x = 0 \quad ; \quad u_y = \frac{2(1+\upsilon)\sigma}{E} x$$

Case 3:
We now consider a case with no displacement in the y-direction (see Fig. 2.7). It has horizontal edges after a rigid body rotation. Now:

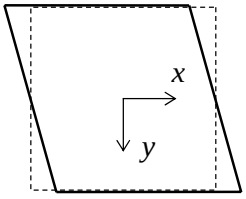

Fig. 2.7: Deformation with zero displacement in y-direction.

$$b_2 = 0 \quad \rightarrow \quad a_3 = \frac{2(1+\upsilon)\sigma}{E} \quad ; \quad \omega = -\frac{(1+\upsilon)\sigma}{E}$$

and so:

$$u_x = \frac{2(1+\upsilon)\sigma}{E} y \quad ; \quad u_y = 0$$

In all three cases the same shear stress occurs, however the displacement fields are different. The difference is related to the magnitude and sign of the rigid body rotation.

Remark
There is a field of displacements that consists only of rigid body displacements:

$$u_x(x,y) = C_1 - C_3 y$$
$$u_y(x,y) = C_2 + C_3 x$$

Substitution into the kinematic equations (1.5) shows that the three strains are zero. This means the three stresses are zero too. The constants C_1 and C_2 are translations. The constant C_3 is a rotation.

2.1.2 Quadratic terms

In this section we consider the classic case in the Euler beam theory of a cantilever beam, which is loaded by a moment at the free end, see Fig. 2.8. In this case, no shear force V

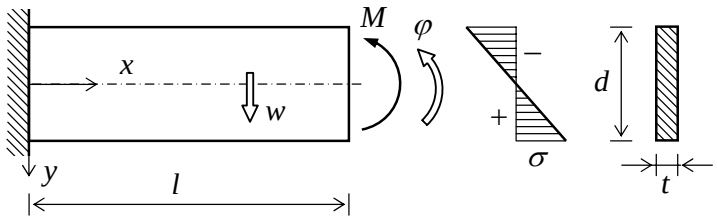

Fig. 2.8: Cantilever beam subjected to pure bending.

occurs and the bending moment M is constant (and positive) over the length of the beam. In the beam theory the stresses in the beam are:

$$\sigma_{xx} = \frac{M}{I} y \quad ; \quad \sigma_{yy} = 0 \quad ; \quad \sigma_{xy} = 0 \tag{2.9}$$

in which $I = \frac{1}{12} d^3 t$ is the second moment of the cross-sectional area. This stress distribution is based on the assumption that a plane cross-section remains plane after applying the load. The stress state (2.9) satisfies equation (1.16) and therefore is a set of equilibrating stresses. In the stresses a term occurs which is linear in y, which means that we also can expect linear terms in the strains. Because strains are first derivatives of displacements, we therefore must consider quadratic displacement terms. We start with the most general form of all quadratic terms:

$$u_x(x,y) = a_4 x^2 + a_5 xy + a_6 y^2 \quad ; \quad u_y(x,y) = b_4 x^2 + b_5 xy + b_6 y^2 \tag{2.10}$$

The strains now are:

$$\begin{aligned}\varepsilon_{xx} &= 2a_4 x + a_5 y \\ \varepsilon_{yy} &= b_5 x + 2b_6 y \\ \gamma_{xy} &= \left(a_5 + 2b_4\right) x + \left(2a_6 + b_5\right) y\end{aligned} \tag{2.11}$$

and the stresses are:

$$\begin{aligned}\sigma_{xx} &= \frac{E}{1-\upsilon^2}\left\{\left(2a_4 + \upsilon b_5\right) x + \left(a_5 + 2\upsilon b_6\right) y\right\} \\ \sigma_{yy} &= \frac{E}{1-\upsilon^2}\left\{\left(2\upsilon a_4 + b_5\right) x + \left(\upsilon a_5 + 2b_6\right) y\right\} \\ \sigma_{xy} &= \frac{E}{2\left(1+\upsilon\right)}\left\{\left(a_5 + 2b_4\right) x + \left(2a_6 + b_5\right) y\right\}\end{aligned} \tag{2.12}$$

A comparison of these stresses with the actual stresses (2.9) shows that:

$$\begin{aligned} &2a_4 + \upsilon b_5 = 0 && ; \quad \upsilon a_5 + 2b_6 = 0 \\ &\frac{E}{1-\upsilon^2}\left(a_5 + 2\upsilon b_6\right) = \frac{M}{I} && ; \quad a_5 + 2b_4 = 0 \\ &2\upsilon a_4 + b_5 = 0 && ; \quad 2a_6 + b_5 = 0\end{aligned}$$

The solution to these six equations is:

$$\begin{aligned} &a_4 = 0 \quad ; \quad a_5 = \frac{M}{EI} \quad ; \quad a_6 = 0 \\ &b_4 = -\frac{M}{2EI} \quad ; \quad b_5 = 0 \quad ; \quad b_6 = -\frac{\upsilon M}{2EI}\end{aligned}$$

Thus the displacements are:

$$u_x(x,y) = \frac{M}{EI} xy \quad ; \quad u_y(x,y) = -\frac{M}{2EI}\left(x^2 + \upsilon y^2\right) \tag{2.13}$$

For a homogenous moment distribution the classic assumption that a plane cross-section remains plane after loading is correct, as appears from (2.13), because u_x has a linear dependence on y. The stress state doesn't change when a rigid body displacement is added. Such a field is:

$$u_x(x,y) = c_1 - c_3 y \quad ; \quad u_y(x,y) = c_2 + c_3 x \tag{2.14}$$

In total we get:

$$u_x\left(x,y\right) = \frac{M}{EI} xy + c_1 - c_3 y \quad ; \quad u_y\left(x,y\right) = -\frac{M}{2EI}\left(x^2 + \upsilon y^2\right) + c_2 + c_3 x \tag{2.15}$$

The three constants c_1, c_2 and c_3 have to be solved from the boundary conditions. In the example we have a support in $x = 0$. We interpret this support as conditions that hold for $x = 0$, $y = 0$. The axis of the beam in $x = 0$ cannot translate and rotate, the bar axis remains horizontal.

$$\left.\begin{array}{l} u_x = 0 \quad ; \quad u_y = 0 \\ \dfrac{\partial u_y}{\partial x} = 0 \end{array}\right\} \quad \text{for} \quad x = 0 \quad \text{and} \quad y = 0$$

From (2.15) we find:

$$c_1 = 0 \quad ; \quad c_2 = 0 \quad ; \quad c_3 = 0$$

Apparently the equations (2.13) already fully meet the boundary conditions. To interpret these results, we should move over to the deflection w and the rotation φ of the cross-section. Because of the plane section after deformation we can write:

$$u_x = y\varphi \quad ; \quad u_y = w$$

Using this, (2.13) changes into:

$$\varphi = \frac{M}{EI}x \quad ; \quad w = -\frac{1}{2}\frac{M}{EI}\left(x^2 + \upsilon y^2\right) \tag{2.16}$$

At the free end of the beam, at the position of the axis $\left(x = l\,, y = 0\right)$, we find:

$$\varphi = \frac{M\,l}{EI} \quad ; \quad w = -\frac{1}{2}\frac{M\,l^2}{EI}$$

These results are well known from the elementary beam theory. The rotation φ is both the inclination of the beam axis and the tilt of the cross-section. We conclude that the very well known results of the Euler beam theory are confirmed by the plate theory. From (2.16) it follows, that the rotation φ increases linearly with x and the vertical deflection w is square in x. In one way the results of the plane stress theory differ from the Euler beam theory. The predicted deflections are only consistent along the axis of the beam, where $y = 0$. Outside the beam axis $(y \neq 0)$ a small correction factor is needed when $\upsilon \neq 0$. So strictly speaking, the assumption of the deflection on all points along the height of the beam being the same is incorrect. However, for slender beams the correction term is an order $\upsilon (d/l)^2$ smaller than the main term. This is approximately in the order of one percent or less, so the assumption in the beam theory is very acceptable.

Remark

The boundary condition in $x = 0, y = 0$, in fact means that the horizontal displacement u_x is obstructed in the complete vertical cross-section in $x = 0$, but that the vertical displacement u_y could occur freely in this section, except for $y = 0$ (see Fig. 2.9). The bar axis is horizontal at the clamped end.

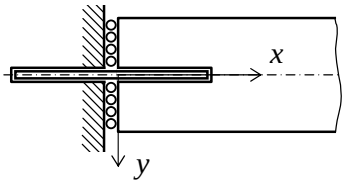

Fig. 2.9: Detail of the boundary condition at the restrained end.

2.1.3 Third-order terms

We increase the complexity of the cantilever beam by replacing the moment at the free end by a downward vertical force F (see Fig. 2.10). Now a constant shear force V occurs (positive)

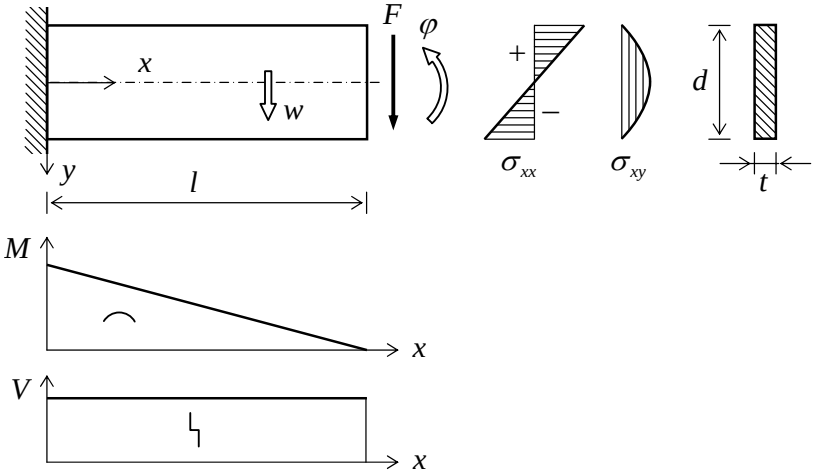

Fig. 2.10: Cantilever beam loaded by a shear force.

and the bending moment M varies linearly along the beam axis (negative). The expressions for M and V are:

$$M = -F\left(l - x\right) \quad ; \quad V = F$$

The stresses are:

$$\begin{aligned} \sigma_{xx} &= \frac{M\,y}{I} = \frac{F}{I}\left(x y - l y\right) \\ \sigma_{yy} &= 0 \\ \sigma_{xy} &= \frac{3}{2}\left(1 - \frac{4y^2}{d^2}\right)\frac{V}{A} = \frac{3F}{2A}\left(1 - \frac{4y^2}{d^2}\right) \end{aligned} \tag{2.17}$$

of which:

$$A = t\,d \quad ; \quad I = \frac{1}{12}\,t\,d^3$$

This set of equations satisfies the equilibrium equations (1.16). The boundary conditions in the left end of the beam axis ($x = 0, y = 0$) are chosen in the same fashion as in the previous example with the moment load (horizontal bar axis):

$$u_x = 0 \quad ; \quad u_y = 0 \quad ; \quad \frac{\partial u_y}{\partial x} = 0$$

In the expression for the stress σ_{xx} a term $-Fly/I$ is present, which we recognise as the distribution of a constant moment $M = -Fl$. For such a stress state we already found:

$$u_x = \frac{M}{EI} xy = -\frac{Fl}{EI} xy \quad ; \quad u_y = \frac{1}{2}\frac{M}{EI}\left(x^2 + \upsilon y^2\right) = \frac{Fl}{2EI}\left(x^2 + \upsilon y^2\right) \tag{2.18}$$

In the stress σ_{xy} a constant part $3F/2A$ is also present. Taking into account the boundary conditions, case 3 of example 2 (section 2.1.1) is applicable. We substitute $G = E/2(1+\upsilon)$:

$$u_x = \frac{\sigma}{G} y = \frac{3F}{2GA} y \quad ; \quad u_y = 0 \tag{2.19}$$

The residual part of the stresses is:

$$\sigma_{xx} = \frac{F}{I} xy \quad ; \quad \sigma_{yy} = 0 \quad ; \quad \sigma_{xy} = -\frac{6F}{Ad^2} y^2 \tag{2.20}$$

The displacement field corresponding with these stresses still needs to be determined. Quadratic stress polynomials imply quadratic strain polynomials and cubic displacement polynomials, because strains are the first derivative of the displacements. So, we start from the most general cubic terms:

$$\begin{aligned} u_x(x,y) &= a_7 x^3 + a_8 x^2 y + a_9 x y^2 + a_{10} y^3 \\ u_y(x,y) &= b_7 x^3 + b_8 x^2 y + b_9 x y^2 + b_{10} y^3 \end{aligned} \tag{2.21}$$

The corresponding strains are:

$$\begin{aligned} \varepsilon_{xx} &= 3a_7 x^2 + 2a_8 xy + a_9 y^2 \\ \varepsilon_{yy} &= b_8 x^2 + 2b_9 xy + 3b_{10} y^2 \\ \gamma_{xy} &= \left(a_8 + 3b_7\right) x^2 + 2\left(a_9 + b_8\right) xy + \left(3a_{10} + b_9\right) y^2 \end{aligned} \tag{2.22}$$

And the stresses:

$$\begin{aligned} \sigma_{xx} &= \frac{E}{1-\upsilon^2}\left\{\left(3a_7 + \upsilon b_8\right) x^2 + 2\left(a_8 + \upsilon b_9\right) xy + \left(a_9 + 3\upsilon b_{10}\right) y^2\right\} \\ \sigma_{yy} &= \frac{E}{1-\upsilon^2}\left\{\left(3\upsilon a_7 + b_8\right) x^2 + 2\left(\upsilon a_8 + b_9\right) xy + \left(\upsilon a_9 + 3b_{10}\right) y^2\right\} \\ \sigma_{xy} &= \frac{E}{2(1+\upsilon)}\left\{\left(a_8 + 3b_7\right) x^2 + 2\left(a_9 + b_8\right) xy + \left(3a_{10} + b_9\right) y^2\right\} \end{aligned} \tag{2.23}$$

A comparison with (2.20) shows:

$$\begin{array}{lll} 3a_7+\upsilon b_8=0 \quad ; & \dfrac{2E}{1-\upsilon^2}\left(a_8+\upsilon b_9\right)=\dfrac{F}{I} \quad ; & a_9+3\upsilon b_{10}=0 \\ 3\upsilon a_7+b_8=0 \quad ; & \upsilon a_8+b_9=0 \quad ; & \upsilon a_9+3b_{10}=0 \\ a_8+3b_7=0 \quad ; & a_9+b_8=0 \quad ; & G\left(3a_{10}+b_9\right)=-\dfrac{6F}{Ad^2} \end{array}$$

The solution of these nine equations for eight unknown coefficients only produces four coefficients unequal to zero:

$$a_8=\frac{F}{2EI} \quad ; \quad a_{10}=-\frac{2F}{GAd^2}+\frac{\upsilon F}{6EI} \quad ; \quad b_7=-\frac{F}{6EI} \quad ; \quad b_9=-\frac{\upsilon F}{2EI}$$

The displacements in this case are:

$$u_x=a_8x^2y+a_{10}y^3 \quad ; \quad u_y=b_7x^3+b_9xy^2$$

After substitution of the values for the coefficients:

$$u_x=\frac{F}{2EI}x^2y+(-\frac{2F}{GAd^2}+\frac{\upsilon F}{6EI})y^3 \quad ; \quad u_y=-\frac{F}{6EI}x^3-\frac{\upsilon F}{2EI}xy^2 \tag{2.24}$$

The total displacement field is found by adding (2.18), (2.19) and (2.24), and the addition of a rigid body displacement. In this final result we combine the terms with EI and the terms with GA:

$$\begin{aligned} u_x&=\frac{F}{EI}\left\{x\left(\frac{1}{2}x-l\right)y+\frac{\upsilon}{6}y^3\right\}+\frac{F}{GAd^2}\left(-2y^3+\frac{3}{2}d^2y\right)+c_1-c_3y \\ u_y&=\frac{F}{EI}\left\{x^2\left(-\frac{1}{6}x+\frac{1}{2}l\right)+\upsilon\left(-\frac{1}{2}x-\frac{1}{2}l\right)y^2\right\}+c_2+c_3x \end{aligned} \tag{2.25}$$

The boundary conditions are met for $c_1=0$, $c_2=0$, $c_3=0$. If we define the rotation φ as the inclination of the beam axis:

$$\varphi=-\frac{\partial u_y}{\partial x}$$

and the displacement w as the vertical displacement u_y of the beam axis, the rotation φ and deflection w of the free beam end (in the axis of the beam) are:

$$\varphi=-\frac{1}{2}\frac{Fl^2}{EI} \quad ; \quad w=\frac{1}{3}\frac{Fl^3}{EI} \tag{2.26}$$

Again, these are equal to the well-known results of the classic beam theory. However, the cross-sections don't stay plane anymore. In u_x not only the linear terms in y are present, but also terms in y^3, even when $\upsilon=0$. Nonetheless, the bending stress develops linearly over the

height of the beam. So, an erroneous assumption in the classical beam theory leads to correct solutions for the stresses!
Now we want to have a closer look at the shape of the deformed beam at the restrained end (see the left figure of Fig. 2.11).

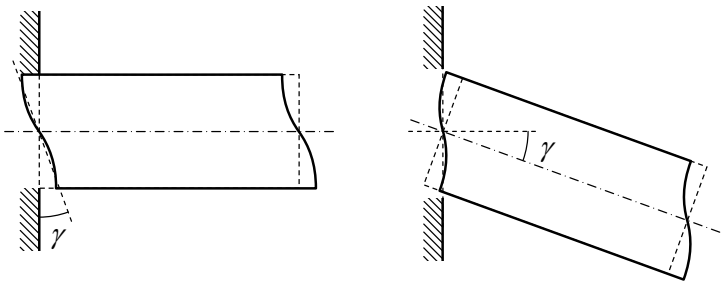

Fig. 2.11: Rotation caused by shear deformation.

We see that a horizontal beam axis does not imply that the cross-section takes up a vertical position. Firstly, the cross-section is warped. On top of that, the "mean" cross-section is tilted. The warping and the tilt are the result of transverse contraction (Poisson ratio) and shear deformation (γ), though primarily by the latter. The shear deformation is recognizable by the term that holds GA. A rigid body rotation over an angle γ is necessary to eliminate the tilt caused by the shear deformation. This rigid body rotation generates an additional displacement at the free end of the beam. This is the contribution of the shear deformation to the deflection. The value of γ is:

$$\gamma = \eta \frac{F}{GA} \tag{2.27}$$

The shape factor η has a value of 1.0 if the shear stress is constant over the cross-section, but for the parabolic variation over a rectangular cross-section the value is 1.2. At the free end of the beam we obtain:

$$\varphi = -\frac{1}{2}\frac{Fl^2}{EI} - \gamma \quad ; \quad w = \frac{1}{3}\frac{Fl^3}{EI} + \gamma l \tag{2.28}$$

Introduction of γ from (2.27) and accounting for $A = t\,d$, $I = t\,d^3/12$ and $G = E/\{2(1+\upsilon)\}$ leads to:

$$\varphi = -\frac{1}{2}\frac{Fl}{EI}\left(1 + \frac{\eta(1+\upsilon)}{3}\frac{d^2}{l^2}\right) \quad ; \quad w = \frac{1}{3}\frac{Fl^3}{EI}\left(1 + \frac{\eta(1+\upsilon)}{2}\frac{d^2}{l^2}\right) \tag{2.29}$$

The term d^2/l^2 mirrors the influence of slenderness of the beam on the end rotation and deflection. When l/d is larger than five, this term may be neglected. The shear force or shear deformation is not of any importance for slender beams.

2.2 Solution for a deep beam or shear wall.

In this section we consider a deep beam on two simple supports, which is loaded along its bottom edge by a homogeneously distributed load *p*, as is shown in the left-hand part of Fig. 2.12. We want to determine the distribution of the bending stresses σ_{xx} in the vertical axis $x = 0$. We replace the structure and load by the problem stated in the right-hand part of Fig. 2.12. The supports in the two lower corners have been replaced by boundary conditions for both vertical edges.

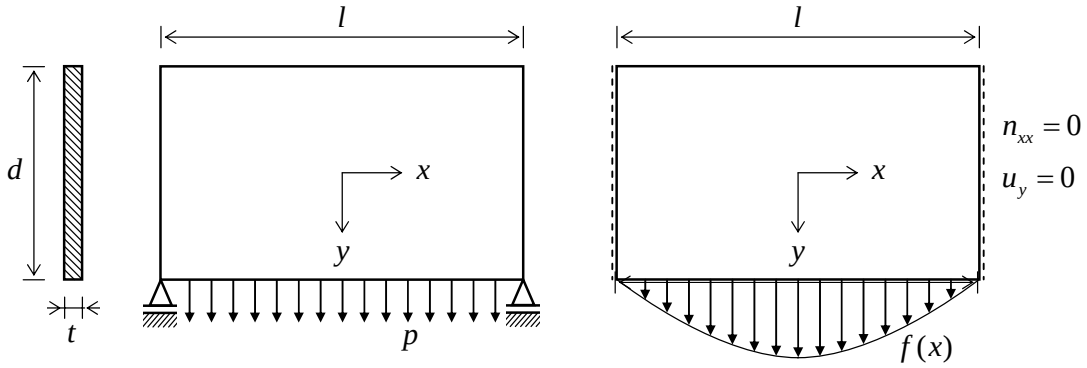

Fig. 2.12: Deep beam.

These edges can freely move horizontally, but prohibit vertical displacements. In the figure this is indicated by the dotted lines. It means that the reaction force will be distributed along the vertical edge. This can be done without changing the bending moment in the vertical cross-section mid-span $(x = 0)$. The homogeneously distributed load p is replaced by a varying load $f(x)$, which has a cosine distribution:

$$f(x) = f\cos(\alpha x) \tag{2.30}$$

in which $\alpha = \pi / l$ and f is the maximum value mid-span. This cosine load is the first term in a Fourier series development of load p, so the value of f is:

$$f = \frac{4}{\pi} p \tag{2.31}$$

Intermezzo

We will show that the value of the bending moment *M* in the mid-span cross-section is practically the same for the actual load p and the replacing load $f(x)$.
The differential equation for beams in bending is:

$$EI\frac{d^4 w}{dx^4} = f(x)$$

in which EI is the bending stiffness and $f(x)$ is a distributed load. The bending moment M is computed by:

$$M = -EI\frac{d^2 w}{dx^2}$$

Load f and displacement w are positive if pointing downwards. The bending moment M is positive when tensile stresses are generated in the bottom part of the beam.

In case of the homogeneously distributed load the following holds: $f(x) = p$. This is a classical case with a well-known solution:

$$w_{\max} = \frac{5}{384}\frac{pl^4}{EI}(= 0,0130\frac{pl^4}{EI}) \quad ; \quad m_{\max} = \frac{1}{8}pl^2 (= 0,125pl^2)$$

The solution for the cosine load is easily found by substitution of the trial displacement function:

$$w(x) = \hat{w}\cos\alpha x$$

in the differential equation with $f(x) = f\cos(\alpha x)$.
This yields a particular solution:

$$w(x) = \frac{fl^4}{\pi^4 EI}\cos(\alpha x) \quad ; \quad M(x) = \frac{fl^2}{\pi^2}\cos(\alpha x)$$

Substitution of $f = 4p/\pi$ results in maximum values:

$$\hat{w} = \frac{(4p/\pi)l^4}{\pi^4 EI} = 0,0131\frac{pl^4}{EI} \quad ; \quad \hat{M} = \frac{(4p/\pi)l^2}{\pi^2} = 0,129pl^2$$

which are very close to the correct values shown above.
For the cosine load, the proposed shape of the deflection $w(x)$ is the exact one in the case of a beam on simple supports. At the supports the boundary conditions are $w = 0$ and $M = 0$. These conditions are satisfied, so the found particular solution is the real solution. No homogeneous solution needs to be added.

Encouraged by the good result for a beam subjected to a cosine load, we propose a similar cosine displacement field $u_y(x, y)$. This choice meets the conditions that the vertical displacement must be zero at the vertical edges and maximum mid-span. The horizontal displacement u_x, however, must be zero in the vertical line of symmetry $(x = 0)$ and can have values that are not zero (equal, but with an opposite sign) at the two vertical edges. Therefore, we use a sine distribution for u_x. So our expectation for the displacements is:

$$u_x(x, y) = \hat{u}_x(y)\sin(\alpha x) \quad ; \quad u_y(x, y) = \hat{u}_y(y)\cos(\alpha x) \tag{2.32}$$

Herein $\hat{u}_x(y)$ is the distribution of the horizontal displacement along both vertical edges and $\hat{u}_y(y)$ is the distribution of the vertical displacement along the line of symmetry.

We substitute the expectation for $u_x(x, y)$ into the biharmonic differential equation (2.1), which results into a normal differential equation for $\hat{u}_x(y)$:

$$\alpha^4 \hat{u}_x - 2\alpha^2 \frac{d^2 \hat{u}_x}{\partial y^2} + \frac{d^4 \hat{u}_x}{dy^4} = 0 \tag{2.33}$$

We suppose a solution of the form:

$$\hat{u}_x = A\, e^{ry} \tag{2.34}$$

Substitution in (2.1) yields a characteristic equation for the roots r:

$$\alpha^4 - 2\alpha^2 r^2 + r^4 = 0 \quad \rightarrow \quad \left(r^2 - \alpha^2\right)^2 = 0$$

or:

$$\left(r - \alpha\right)^2 \left(r + \alpha\right)^2 = 0 \tag{2.35}$$

Apparently we get two equal roots α and two equal roots $-\alpha$. In case of equal roots r the general solution has a term with e^{ry} and a term with ye^{ry}. So the solution for $\hat{u}_x(y)$ becomes:

$$\hat{u}_x(y) = A_1 e^{\alpha y} + A_2 \alpha y e^{\alpha y} + A_3 e^{-\alpha y} + A_4 \alpha y e^{-\alpha y} \tag{2.36}$$

We added a constant α in the second and fourth term in order to give the coefficient A_1 up to and included A_4 equal dimensions. This can be done without loss of generality. Now equation (2.2) is used to determine $\hat{u}_x(y)$. From hereon we choose $\upsilon = 0$. Accounting for (2.32) and after integration, we find:

$$\hat{u}_y(y) = \left(-A_1 + 3A_2\right) e^{\alpha y} - A_2 \alpha y e^{\alpha y} + \left(A_3 + 3A_4\right) e^{-\alpha y} + A_4 \alpha y e^{-\alpha y} \tag{2.37}$$

Based on (2.32), (2.36) and (2.37) the strains can be expressed in the constants too, and therefore also the extensional forces n_{xx}, n_{yy} and n_{xy}. The four constants then can be determined from four boundary conditions:

$$y = -\frac{1}{2}d \quad \rightarrow \quad \begin{cases} n_{yy} = 0 \\ n_{xy} = 0 \end{cases} \qquad ; \qquad y = \frac{1}{2}d \quad \rightarrow \quad \begin{cases} n_{yy} = f \cos \alpha x \\ n_{xy} = 0 \end{cases}$$

The elaboration isn't given here. For n_{xx} in the line of symmetry $(x = 0)$ an expression results in the following form:

$$n_{xx} = \left(A_1 e^{\alpha y} + A_2 \alpha y e^{\alpha y} + A_3 e^{-\alpha y} + A_4 \alpha y e^{-\alpha y}\right) \alpha$$

***Case 1*:** $d/l \gg 1$
This is the case for a short thin wall. In the upper part of the wall the influence of the load on the lower edge isn't noticeable. A highly non-linear result is found.

***Case 2*:** $d/l \approx 1$
This is the case for a wall or beam the height and length of which are nearly equal. The bending stress distribution is still non-linear, but approaches the classical beam theory.

***Case 3*:** $d/l \ll 1$

This is the case for the slender beam and we are expected to find the solution for the Euler beam theory. If $d/l \ll 1$ is true, so is $\alpha y \ll 1$. For these little arguments αy, all the exponential functions can be expanded in a Taylor series in point $y = 0$. It appears that the contributions to n_{xx} of powers of αy larger than 1, are negligibly small, so a linear distribution remains. This is the classical solution.

In Fig. 2.13 the results for the three cases are given.

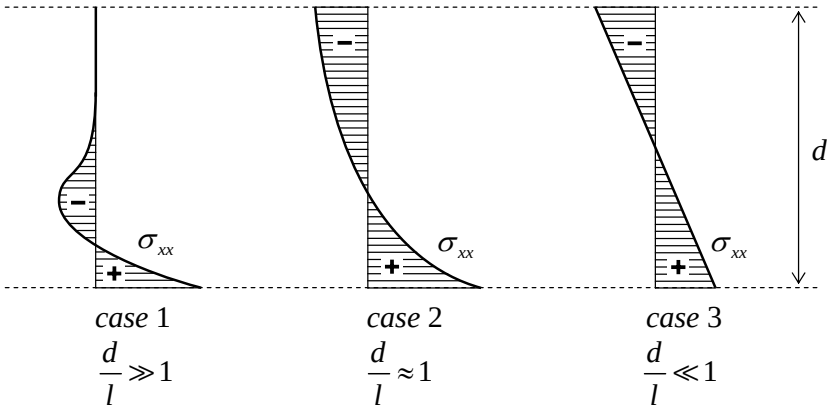

Fig. 2.13: Results for several values of the depth-span ratio.

Practical application

The discussed case of a thin high wall ($d \gg l$) can be used to estimate the stress distribution in practical structures. An example of this is a silo wall on columns, loaded by a uniformly distributed load (see Fig. 2.14). This may be the dead weight and the wall friction forces due to the bulk material in the silo. To estimate the horizontal stress σ_{xx} halfway between the columns, we will adopt the following approach.

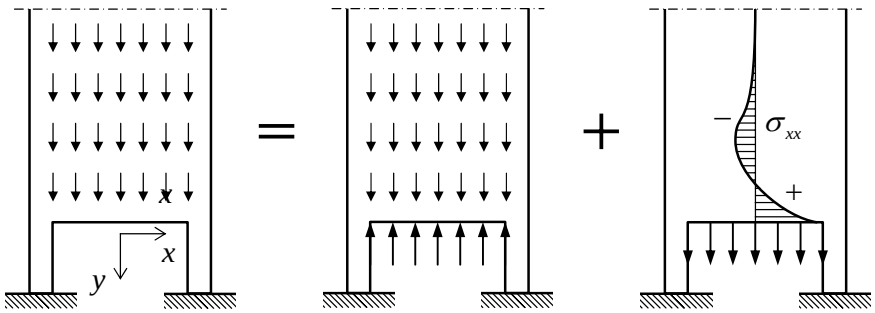

Fig. 2.14: Wall of silo on columns.

The load can be split up into two parts. Part 1 is a simple stress state in which only vertical stresses σ_{yy} are present and no stresses σ_{xx} occur. So, we are not interested in part 1. The second part is the load case in which the solution for the high wall can be applied.

Intermezzo

Structural engineers who must design reinforced concrete walls often apply truss models for the determination of the reinforcement. In the case of the silo wall they may concentrate the total distributed load in two forces F as shown in Fig. 2.15.

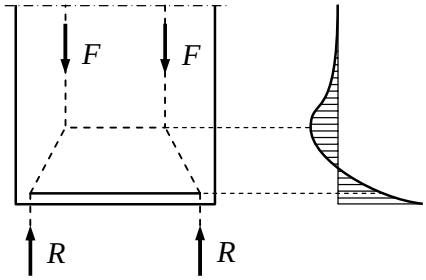

Fig. 2.15: Strut-and-tie model for silo wall.

Each support reaction R is equal to F. The dashed lines carry compressive forces and a tensile force occurs in the solid line. The structural engineer wants to know where he must position the horizontal compressive strut and the tensile tie, because the distance between them influences the magnitude of the forces in the strut and tie. Knowledge about the elastic solution will be a big help.

2.3 Other examples

Another example is a circular hole in a plate subjected to a homogenously distributed stress state in which the (normal) stress σ is equal in all directions. The hole causes a disturbance in this homogenously distributed stress field. In Fig. 2.16 the variation of the stresses σ_{xx} and

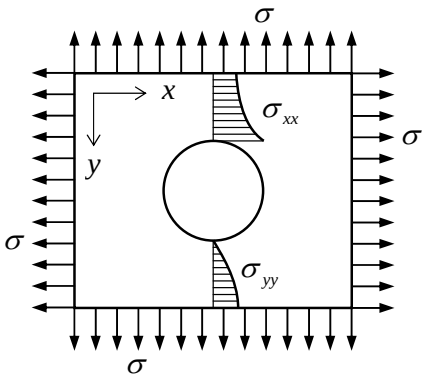

Fig. 2.16: Plate with circular hole subjected to a biaxial homogeneous stress state.

σ_{yy} along the vertical through the centre of the hole is visualised. On the edge of the hole the stress is: $\sigma_{xx} = 2\sigma$. This means a doubling of the stress of the homogenously distributed stress state. The factor 2 is called the stress concentration factor. The derivation is not given here.

A higher stress concentration factor occurs at a circular hole in a plate that suffers a one-dimensional stress state (see Fig. 2.17). At the edge of the hole a stress of magnitude $\sigma_{xx} = 3\sigma$ can be found.

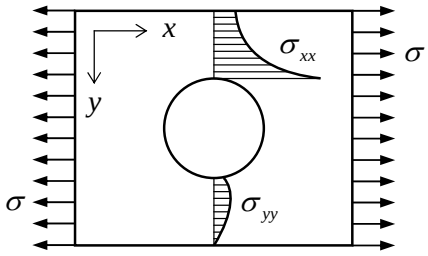

Fig. 2.17: Plate with circular hole subjected to a uniaxial homogeneous stress state.

Another example is a curved beam (see Fig. 2.18). The bending stresses in a cross-section do not vary linearly anymore. In the direction towards the centre of curvature they strongly increase and the maximum stress on the inside may be much larger than can be expected on basis of the elementary bending theory for a straight beam.

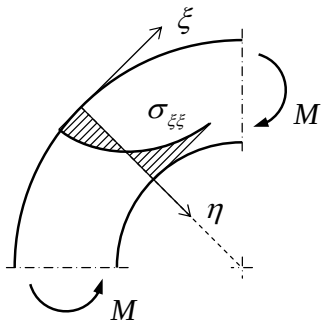

Fig. 2.18: Strongly curved circular bar subjected to a bending moment.

Many interesting stress states can be described with analytical solutions, but many others cannot, for example because the boundary conditions cannot be met or because the contour of the plane stress state cannot be simply described. In such cases numerical methods like the Finite Difference Method or Finite Element Method can offer a solution.
We want to give some more examples of stress states that have been determined in the numerical way.

First we analyse another high wall with a load in the middle and restraints along the bottom edge as shown in Fig. 2.19. In this way a foundation block can be modelled. The normal stresses σ_{xx} don't vary linearly again. The maximum stress at the bottom is noticeably higher

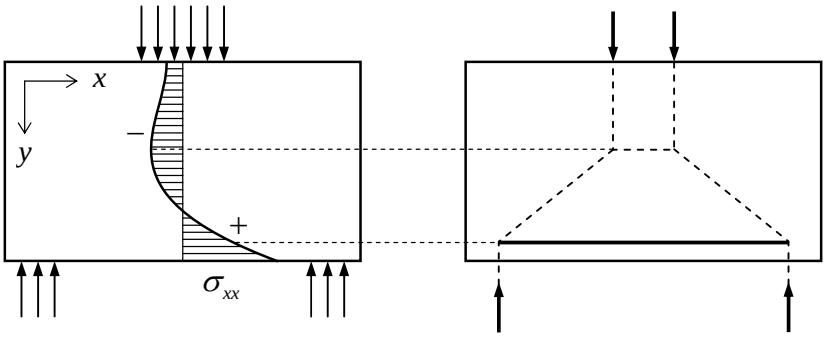

Fig. 2.19: Foundation block.

than the elementary bending theory would have calculated. The moment of these stresses of course should be equal to the total moment in the considered cross-section. In Fig. 2.19 the strut-and-tie model is also shown.

A second example addresses the problem of load distribution in an element (see Fig. 2.20). An example of this is the load in a beam caused by the anchorage of a prestressed cable. At some distance from the end of the section the forces are distributed uniformly. If we make a vertical cut in the middle and consider one of the halves, then it follows from the equilibrium

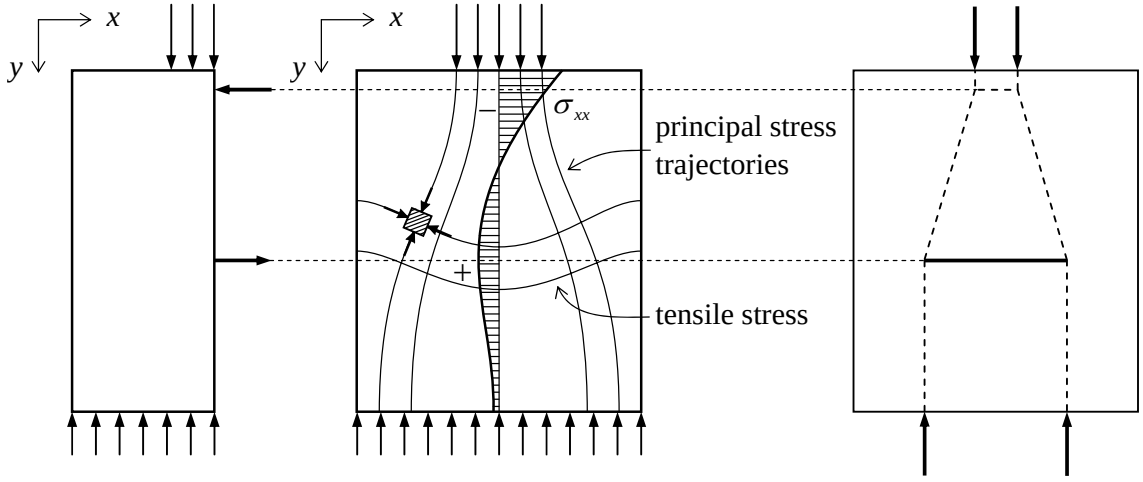

Fig. 2.20: Load spreading (for example the anchorage of a prestressed cable in a beam).

that in this cutting plane horizontal stresses σ_{xx} should be present, which are compression stresses at the top and tensile stresses at the bottom. The distribution of this shows the attenuated character again. Practice is not ordinarily prepared for these tensile stresses. They can lead to vertical cracks and a concrete beam will require horizontal reinforcement (stirrups or spiral reinforcement). In Fig. 2.20 some principal stress trajectories are depicted. The corresponding strut-and-tie model is also shown.

A similar example of load spreading is the foundation footing as is found under buildings with brick walls (see Fig. 2.21). If we make another vertical cut and consider the equilibrium of one of the halves, it will show the presence of horizontal tensile stresses σ_{xx} at the bottom.

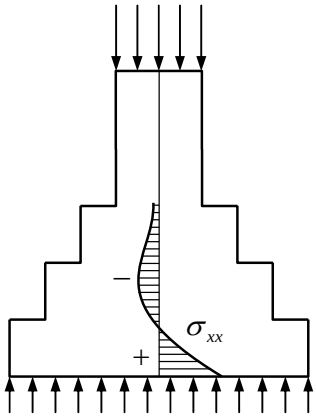

Fig. 2.21: Foundation foot.

To determine the magnitude, the stress problem has to be fully solved.
The broader the base of the foundation, the lower the pressure on the soil. However, the tensile stresses in the brickwork will increase, and minding the poor tensile strength of this material, they will lead to cracks soon.
Set-back corners (window, door or other openings in a wall) deserve special attention. Figs. 2.22 and 2.23 give two more examples.

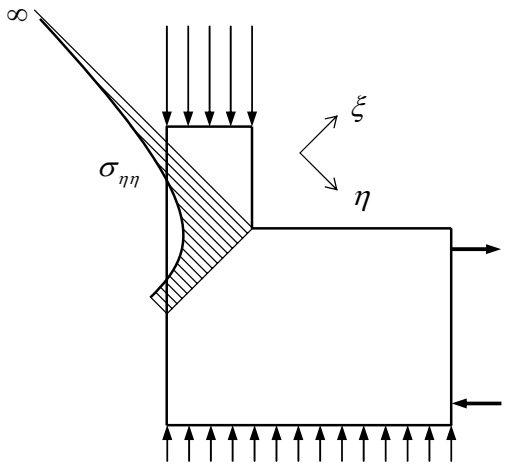

Fig. 2.22: Set-back corner.

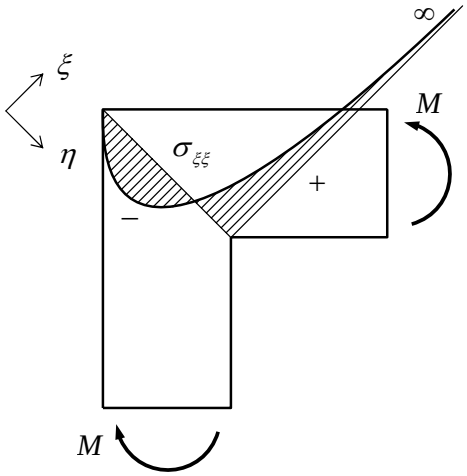

Fig. 2.23: Beam-column connection.

If there is no rounding in the corner theoretically the stresses are infinitely large. In this relation we speak of notch stresses. Many cracks are the result of this and many accidents have occurred (e.g. aeroplane industry). These corners ask for special attention from the designer. Often they have to be rounded off (plane windows) or strengthened in another way. Concrete structures need special detailed designs for the reinforcement in such corners.

2.4 Stresses, transformations and principal stresses

The discussed stresses until now have been chosen to be in directions parallel to the x-axis and y-axis. Sometimes it is useful to know the stresses σ_{nn}, σ_{tt} and σ_{nt} in the directions n and t that make an angle φ with the x-axis and y-axis (Fig. 2. 24). With the help of simple

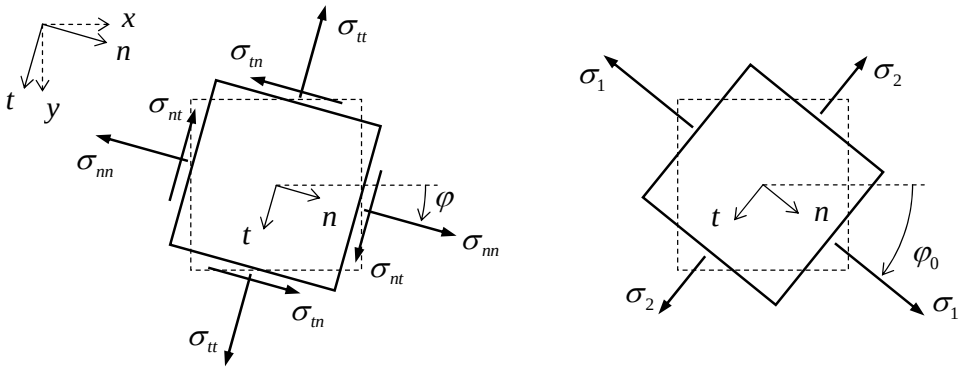

Fig. 2.24: The normal and shear stresses can be obtained by transformation for every arbitrary direction; for one specific value φ_0, principal stresses occur.

transformation rules such stresses can be calculated if σ_{xx}, σ_{yy} and σ_{xy} are known:

$$\begin{aligned}
\sigma_{nn} &= \sigma_{xx}\cos^2\varphi + \sigma_{yy}\sin^2\varphi + \sigma_{xy}\sin 2\varphi \\
\sigma_{tt} &= \sigma_{xx}\sin^2\varphi + \sigma_{yy}\cos^2\varphi - \sigma_{xy}\sin 2\varphi \\
\sigma_{nt} &= -\frac{1}{2}\sigma_{xx}\sin^2\varphi + \frac{1}{2}\sigma_{yy}\cos^2\varphi + \sigma_{xy}\left(\cos^2\varphi - \sin^2\varphi\right)
\end{aligned} \tag{2.38}$$

Written in another way:

$$\begin{bmatrix} \sigma_{nn} & \sigma_{nt} \\ \sigma_{nt} & \sigma_{tt} \end{bmatrix} = \begin{bmatrix} \cos\varphi & \sin\varphi \\ -\sin\varphi & \cos\varphi \end{bmatrix} \begin{bmatrix} \sigma_{xx} & \sigma_{xy} \\ \sigma_{xy} & \sigma_{yy} \end{bmatrix} \begin{bmatrix} \cos\varphi & -\sin\varphi \\ \sin\varphi & \cos\varphi \end{bmatrix} \tag{2.39}$$

An alternative for this transformation is the graphic determination using the Mohr's circle. There is one special value for φ that has a shear stress value of zero and the two normal stresses then reach an extreme value. These stresses are called principal stresses σ_1 and σ_2 and have the matching direction φ_0, which is called the principal stress direction (Fig. 2.24). The principal stresses are:

$$\sigma_{1,2} = \frac{\sigma_{xx} + \sigma_{yy}}{2} \pm \sqrt{\left(\frac{\sigma_{xx} - \sigma_{yy}}{2}\right)^2 + \sigma_{xy}^2} \tag{2.40}$$

The direction φ_0 belonging to formula (2.40) is computed from:

$$\tan 2\varphi_0 = \frac{2\sigma_{xy}}{\sigma_{xx} - \sigma_{yy}} \tag{2.41}$$

2.5 Processing of stress results

Steel

Once the stress distribution is known, the decision has to be made whether the structure can sustain the stresses. In one-dimensional stress states the procedure is simple. Using steel the calculated stress is compared to the yield stress and using concrete the size of the tension stress determines the amount of reinforcement required.

In plate problems the problem is less simple, because three stress components are found in one point. In steel the ideal stress $\bar{\sigma}$ (the Von Mises stress) is compared to the yield stress and this stress is calculated from the three components as follows:

$$\bar{\sigma} = \sqrt{\sigma_{xx}^2 + \sigma_{yy}^2 - \sigma_{xx}\sigma_{yy} + 3\sigma_{xy}^2} \tag{2.42}$$

This formula results in the same answer, independently on the direction the stresses are calculated in. In the direction of the principal stress the shear stress is zero and the formula simplifies. For a three-dimensional stress state it receives the following formulation expressed in the principal stresses:

$$2\bar{\sigma}^2 = (\sigma_1 - \sigma_2)^2 + (\sigma_2 - \sigma_3)^2 + (\sigma_3 - \sigma_1)^2 \tag{2.43}$$

Structural concrete

For concrete the calculation is different. In the case of σ_{xx} and σ_{yy} both being positive, reinforcement is needed in two directions. The shear stresses σ_{xy} cause the need for some additional reinforcement in both directions. The reinforcement may be calculated on the basis of two *reinforcement stresses* $\bar{\sigma}_{xx}$ and $\bar{\sigma}_{yy}$, for which the following formulas are valid in their simplest form:

$$\begin{aligned} \bar{\sigma}_{xx} &= \sigma_{xx} + |\sigma_{xy}| \\ \bar{\sigma}_{yy} &= \sigma_{yy} + |\sigma_{xy}| \end{aligned} \tag{2.44}$$

The absolute signs are necessary because the reinforcement increases for the positive as well as the negative shear stresses. Only the assumed direction of cracking will be different, as shown in Fig. 2.25.

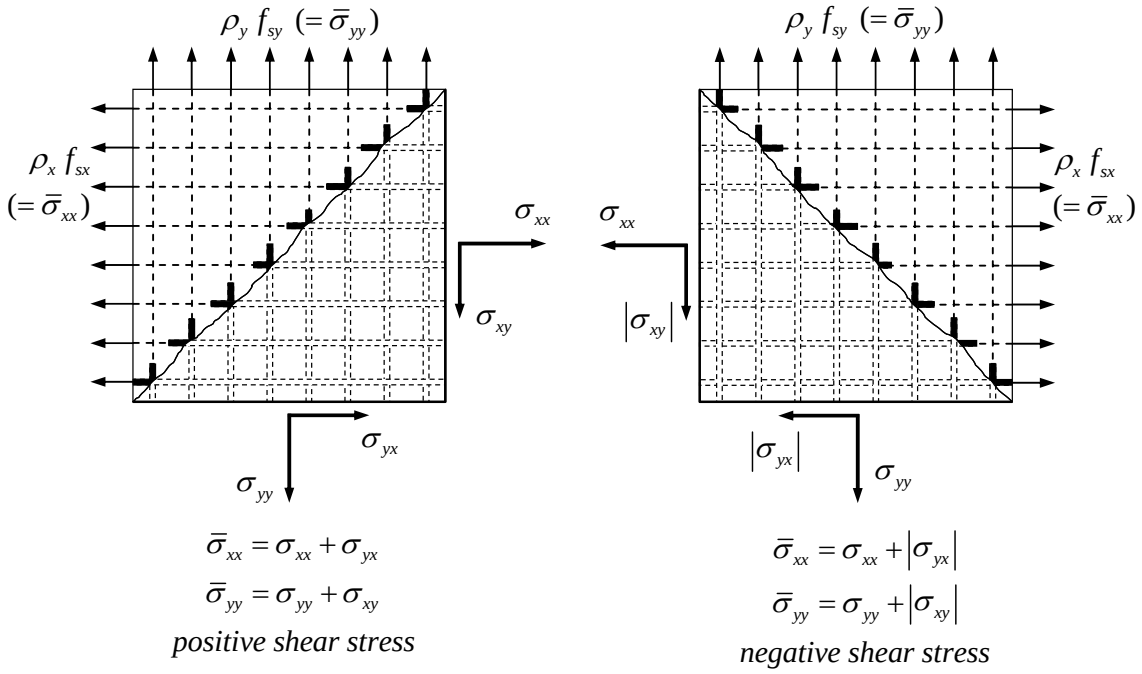

Fig. 2.25: Determination of the reinforcement stresses $\bar{\sigma}_{xx}$ and $\bar{\sigma}_{yy}$.

If $\bar{\sigma}_{xx}$ and $\bar{\sigma}_{yy}$ are negative, no reinforcement is required, but with positive values it is. This method can even result in reinforcement if σ_{xx} and σ_{yy} are compression stresses (thus negative) themselves, because σ_{xy} is added in its absolute value. This way the reinforcement stresses can become positive.

The reinforcement stresses should be equal (except for a safety factor) to the product of the yield stress f_s of the reinforcement and the reinforcement ratio ρ.

In Fig. 2.26 it can be seen that diagonal struts come into being parallel to the cracks. The concrete compressive stress is 2 times the shear stress σ for which the reinforcement is determined.

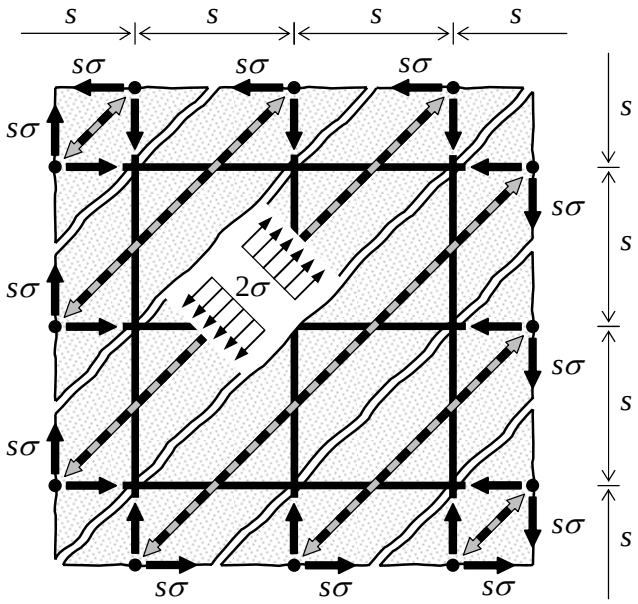

Fig. 2.26: Membrane shear forces σ are supposed to crack the concrete, to strain the reinforcement and to evocate diagonal compressive struts (s is the spacing of the reinfocement bars); the tensile force in each rebar is $s\sigma$.

3 Thick plates loaded perpendicularly to their plane

3.1 Introduction: special case of a plate, the beam

A plate subjected to a load perpendicular to its plane is in a state of bending. If it is a concrete plate, it is called a *slab*. Slabs are a generalization of beams. A beam spans in one direction, but a slab is able to carry loads in two directions. Fig. 3.1 shows an example of a slab on four supports under a point load F_z. The mid-plane of the slab is in the x-y plane and F_z is acting in the z-direction perpendicular to the slab. The slab will undergo deflections, and moments and shear forces can be expected.
The aim of this chapter is to explain in which way these stress resultants can be determined.

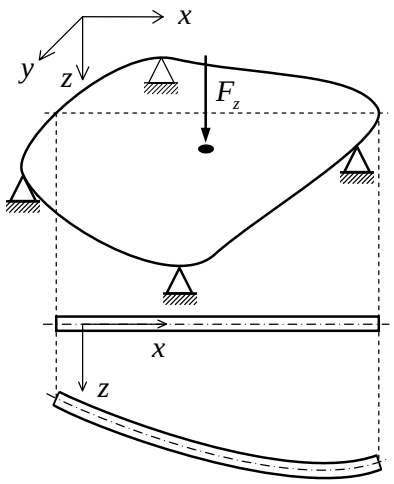

Fig. 3.1: Plate with transverse force, loaded in bending and shear.

If both bending moments and shear forces occur, in general bending deformations and shear deformations have to be accounted for. For beams it is known that shear deformation can only be neglected if the beams in question are slender. Similarly we must distinct between *thin plates* and *thick plates*. We will start in such a way that the theory applies for both categories, but will soon reduce in complexity and restrict ourselves to the theory for thin plates and its application. The reason to start in a more general way that includes thick plates is that many computer programs also offer options for thick plates.

As we have done in chapter 2 for plates loaded in their plane, we will start with the simple case of a plate that spans in one direction. We will not consider the effect of Poisson's ratio yet and leave that for later. Thus, we can consider a strip of width b and depth d as shown in Fig. 3.2.

We choose a beam axis halfway depth d. This axis coincides with the x-axis of a chosen set of axes x and z. The z-axis is pointing downward and is perpendicular to the beam axis. The displacement of the beam axis in the z-direction is called w. In the beam theory, it is assumed that no normal force will occur due to constrained supports. This will be true if the

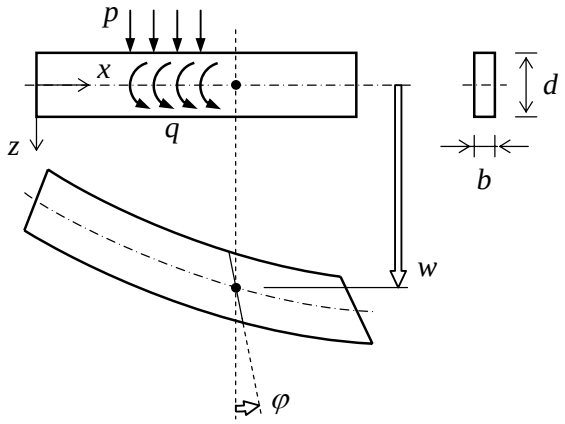

Fig. 3.2: Beam with degrees of freedom w and φ and loading p and q.

deflections are small compared to the depth of the beam ($w << d$). Then the beam axis has no strain and will not elongate. It means that a cross-section after applying of the load will rotate over an angle φ about neutral axis of the cross-section, which is at $z = 0$, see Fig. 3.2. We start by assuming that the rotation φ is an independent degree of freedom, together with the displacement w.
Fig. 3.2 suggests that a flat unloaded cross-section remains flat after the load is applied. From chapter 2 we know that this is not generally true. The rotated straight cross-section in Fig. 3.2 is the average straight line, which replaces the warped shape of the cross-section as well as possible, as is shown in Fig. 2.11.

To have two independent degrees of freedom means that we can apply two independent load components. In the direction w a distributed line load p can be applied and in the direction of φ a distributed torque q.
The stresses in a cross-section have resultants M, the bending moment, and V, the shear force. These resultants cause a curvature κ and a (average) shear deformation γ, respectively. The total scheme of quantities for the beam problem is shown in Fig. 3.3.

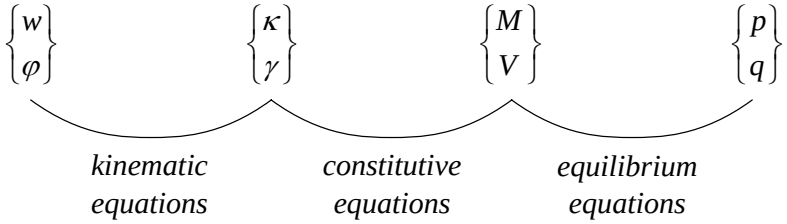

Fig. 3.3: Relation scheme for bending and shear in beams.

The curvature κ is the change of the rotation φ per unit length of the beam and the shear deformation γ is the change of the right angle between beam axis and cross-section, see Fig. 3.4. We introduce the symbol D_κ for the bending stiffness EI and D_γ for the shear stiffness GA_s in which A_s is the cross-sectional area A divided by the shape factor η in order to account for the warped shape and the inhomogeneous distribution of the shear stresses over the cross-section. The factor η is 6/5 for a rectangular shape.

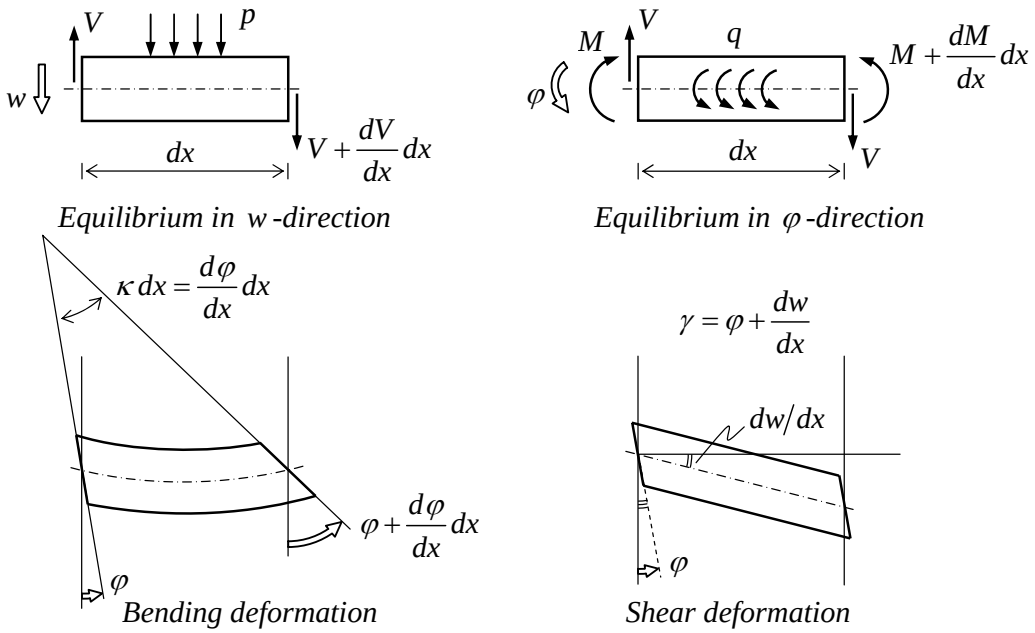

Fig. 3.4: Equilibrium in w- and φ-direction; definition of bending and shear deformation.

Equilibrium can be formulated in the two directions w and φ on basis of the forces acting on a part of the beam of length dx as depicted in Fig. 3.4.
The three basic sets of equations are:

$$\left.\begin{aligned} \kappa &= \frac{d\varphi}{dx} && (\textit{change of rotation}) \\ \gamma &= \varphi + \frac{dw}{dx} && (\textit{change of right angle}) \end{aligned}\right\} \quad (\textit{kinematic equations}) \tag{3.1}$$

$$\left.\begin{aligned} M &= D_\kappa \kappa && (\textit{bending deformation}) \\ V &= D_\gamma \gamma && (\textit{shear deformation}) \end{aligned}\right\} \quad (\textit{constitutive equations}) \tag{3.2}$$

$$\left.\begin{aligned} \frac{dV}{dx} + p &= 0 && (w-\textit{direction}) \\ \frac{dM}{dx} - V + q &= 0 && (\varphi-\textit{direction}) \end{aligned}\right\} \quad (\textit{equilibrium equations}) \tag{3.3}$$

Special attention is drawn to the second equilibrium equation. If the external torsional load q is zero, the equation reads that the shear force is the derivative of the bending moment, which is well known to engineers. This implies that the shear force is not equal anymore to the derivative of the moment if a load q is applied!

Substitution of the kinematic equations (3.1) into the constitutive equations (3.2) yields:

$$\begin{aligned} M &= D_\kappa \frac{d\varphi}{dx} \\ V &= D_\gamma \left(\varphi + \frac{dw}{dx} \right) \end{aligned} \tag{3.4}$$

And substitution of these expressions into the equilibrium equations (3.3) transforms these equations in two coupled differential equations for w and φ:

$$\begin{aligned} -D_\gamma \frac{d^2 w}{dx^2} - D_\gamma \frac{d\varphi}{dx} &= p \\ D_\gamma \frac{dw}{dx} + \left(-D_\kappa \frac{d^2}{dx^2} + D_\gamma \right) \varphi &= q \end{aligned} \tag{3.5}$$

These two equations must be solved simultaneously. For two second-order differential equations we need four boundary conditions, two at each end. Per beam end this can be either w or V and either φ or M.

Remark 1

The two differential equations (3.5) in w and φ can be replaced by two equations in w and M in the case that the load q is zero. If one eliminates V from (3.3), one obtains:

$$\boxed{-\frac{d^2 M}{dx^2} = p} \tag{3.5a}$$

Combining (3.1) and (3.2) one obtains the relations:

$$\begin{aligned} M &= D_\kappa \frac{d\varphi}{dx} \\ V &= D_\gamma \left(\varphi + \frac{dw}{dx} \right) \end{aligned} \tag{3.5b}$$

Using this information, the first equation of (3.5) can be rewritten as:

$$\boxed{-D_\gamma \left(\frac{d^2 w}{dx^2} + \frac{M}{D_K} \right) = p} \tag{3.5c}$$

The equations (3.5a) and (3.5c) now replace (3.5).

Illustration

To illustrate this theory we take the problem of a simply supported beam of length l, which is subjected to a cosine load p and zero load q, see Fig. 3.5. The maximum value of p is $\hat{p}$.

We assume a cosine distribution for w with maximum $\hat{w}$ and a sine distribution for φ with maximum $\hat{\varphi}$. For easy writing, we introduce a parameter β, which is defined by:

$$\beta^2 = \frac{D_\gamma}{D_\kappa} = \frac{GA/\eta}{EI}$$

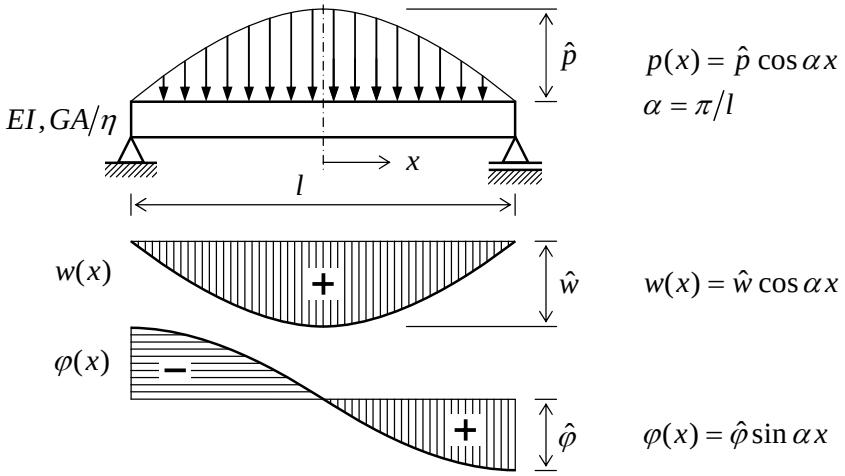

Fig. 3.5: Simply supported beam under cosine load.

For a rectangular cross-section with depth d and $\upsilon = 0.2$ the value of β is practically equal to $2/d$, so β has the same dimension as α which is equal to π/l. The squared quotient $(\alpha/\beta)^2$ is practically equal to $2.5(d/l)^2$ and therefore is apparently a measure for the slenderness of a beam. Substitution of the expected shapes for w and φ into the two differential equations results in two algebraic equations in $\hat{w}$ and $\hat{\varphi}$:

$$EI\begin{bmatrix}\beta^2\alpha^2 & \beta^2\alpha \\ \beta^2\alpha & \beta^2+\alpha^2\end{bmatrix}\begin{Bmatrix}\hat{w}\\ \hat{\varphi}\end{Bmatrix} = \begin{Bmatrix}\hat{p}\\ 0\end{Bmatrix}$$

The solution to these equations is:

$$\hat{w} = \left\{1+\left(\frac{\alpha}{\beta}\right)^2\right\}\frac{\hat{p}}{\alpha^4 EI}$$

$$\hat{\varphi} = -\frac{\hat{p}}{\alpha^3 EI}$$

In this special case, the rotation φ is not influenced by the shear stiffness. The displacement w, however, does depend on β, and so on the shear stiffness, but this influence diminishes for slender beams, because $(\alpha/\beta)^2$ approaches zero in that case. If d/l is 1/5, then the contribution to $\hat{w}$ due to shear is 10 percent. If d/l reduces to 1/10, then the shear contribution is only 2.5 percent. For $d/l = 1/20$ the contribution is less than 1 percent.

> Note: The chosen simple case could have been solved without the use of the differential equations. This is not done here because the general approach is being followed.

For slender beams, the theory can be simplified drastically. Let us return to the basic equations in (3.1), (3.2) and (3.3). If the shear deformation can be neglected, then we can state that γ is zero. From the second equation in (3.1) we then conclude:

$$\varphi = -\frac{dw}{dx} \tag{3.6}$$

Now the rotation φ is not independent anymore, but is related to the displacement w. The first equation in (3.1) now transforms due to (3.6) into:

$$\boxed{\kappa = -\frac{d^2w}{dx^2}} \quad (\textit{kinematics}) \tag{3.7}$$

The second constitutive equation in (3.2) does not make sense any longer. The shear force V still has a value, but the shear stiffness D_γ is infinitely large and the shear deformation γ is zero. We just skip this equation, so the only constitutive equation is:

$$\boxed{M = D_\kappa \kappa} \quad (\textit{constitution}) \tag{3.8}$$

Finally also the equilibrium equations (3.3) must be inspected. If φ is no longer a degree of freedom, we cannot apply a load q. So q is set to be zero. Then the shear force V is the derivative of the bending moment M:

$$V = \frac{dM}{dx} \tag{3.9}$$

We now substitute this result into the first equilibrium equation of (3.3), which results in:

$$\boxed{-\frac{d^2M}{dx^2} = p} \quad (\textit{equilibrium}) \tag{3.10}$$

Summarizing, the exclusion of the shear deformation reduces the six equations in (3.1), (3.2) and (3.3) to the three equations (3.7), (3.8) and (3.10). Fig. 3.6 shows the relation scheme for beams subjected to bending if the shear deformation is neglected.
The three new equations (3.7), (3.8) and (3.10) provide after successive substitution the classical relation between M and w and between V and w (with $D_\kappa = EI$) given by:

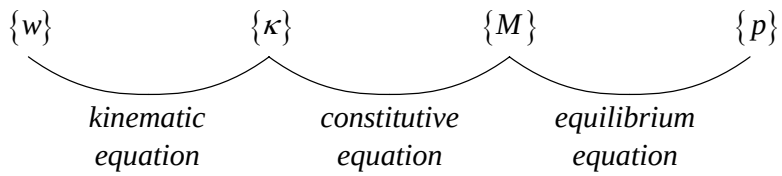

Fig. 3.6: Relation scheme for slender beams (bending deformation only).

$$M = -EI\frac{d^2w}{dx^2}$$
$$V = -EI\frac{d^3w}{dx^3} \tag{3.11}$$

and the fourth-order differential equation then is:

$$EI\frac{d^4w}{dx^4} = p \tag{3.12}$$

This differential equation can be solved taking into account four boundary conditions, two at each end. These are w or V and either dw/dx or M. The reader should be familiar with the application of this classic beam theory.

In the derivation of the beam theory, we made use of a number of assumptions. It is good to summarise them here:

1. No extensional forces occur, so the bar axis is a neutral line. This is valid if $w \ll d$.

2. A flat cross-section remains flat after the load is applied. In fact, the cross-section will undergo warping, but we can work with an "average" plane. The non-homogeneous shear distribution is accounted for by introducing a shape factor η to reduce the shear stiffness.

3. Without saying, it is assumed that σ_{zz} is zero. Due to a Poisson's ratio that is not zero, strains ε_{zz} will occur that are not zero either. Strictly speaking, the vertical displacement will therefore vary a little bit over the depth of the beam. We have neglected this.

4. At the end of the discussion of the theory, the shear deformation has been set to be zero, which limits the theory to slender beams and simplifies it noticeably. This last assumption means that a flat cross-section not just remains flat, but also that it will remain normal to the beam axis.

Remark
If one neglects the shear deformations, it has been found:

$$-\frac{d^2M}{dx^2} = p \tag{3.12a}$$
$$M = -D_\kappa\frac{d^2w}{dx^2} \tag{3.12b}$$

One can compare these equations with (3.5a) and (3.5c) for the case that shear deformation does occur (special case in which the torque load $q = 0$). Equation (3.12a) is exactly the same as equation (3.5a). The equivalence between (3.12b) and (3.5c) is also easily shown if we divide the latter by D_γ:

$$-\left(\frac{d^2w}{dx^2}+\frac{M}{D_\kappa}\right)=\frac{p}{D_\gamma} \tag{3.12c}$$

The case of no shear deformation is achieved when D_γ is chosen as being infinitely large. Then the right-hand member of equation (3.5c) becomes zero and the equation is equal to (3.12b).

3.2 Theory for thick plates

3.2.1 Problem definition

In this chapter, we will give the derivation of the differential equation of the homogeneous isotropic plate subjected to bending and shear. For this purpose we will consider a plate with a constant thickness t as shown in Fig. 3.7. The mid-plane coincides with the x-y plane of a

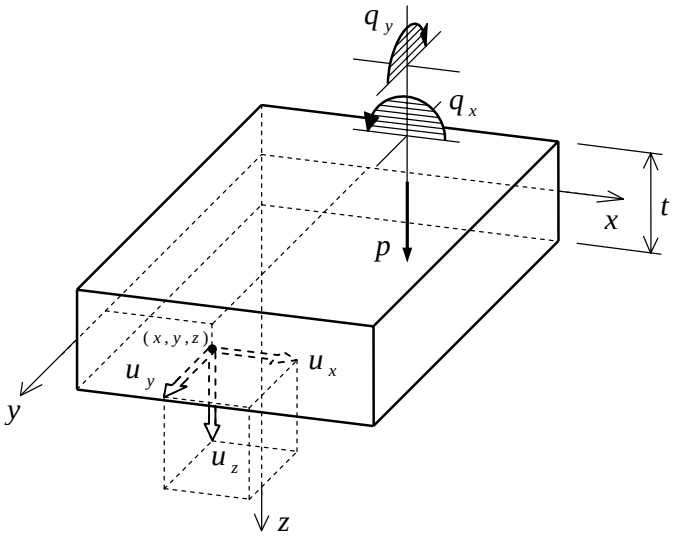

Fig. 3.7: Homogeneous isotropic plate subjected to bending.

right-handed orthogonal coordinate system x, y, z. The z-axis is perpendicular to the unloaded plate. The load contains a randomly distributed load $p(x, y)$ that is supposed to be positive in the positive z-direction and distributed moment loads $q_x(x, y)$ and $q_y(x, y)$, acting about the x-axis, respectively the y-axis. The choice of their positive direction will be explained hereafter.

Because a plate is a three-dimensional body, a point in the plate is identified by its position in the mid-plane (x and y) and the distance to the mid-plane (z).

As a consequence of the load, every point (x, y, z) will experience a displacement $u_x(x, y, z)$ in the x-direction, a displacement $u_y(x, y, z)$ in the y-direction and a displacement

$u_z(x, y, z)$ in the z-direction. From now on, we will replace u_z by w. Displacements in direction of the positive axes are per definition positive. The displacement field therefore is fixed with three degrees of freedom u_x, u_y and w. Internally six deformations occur: three specific strains ε_{xx} in the x-direction, ε_{yy} in the y-direction and ε_{zz} in the z-direction, and three specific shear strains: γ_{xy} in the x-y plane, γ_{xz} in the x-z plane and γ_{yz} in the y-z plane. These deformations go together with the stresses: σ_{xx}, σ_{yy}, σ_{zz}, σ_{xy}, σ_{xz} and σ_{yz}, respectively (see Fig. 3.8). Later on we will see that all six are unequal to zero except σ_{zz}, which is assumed to be zero.

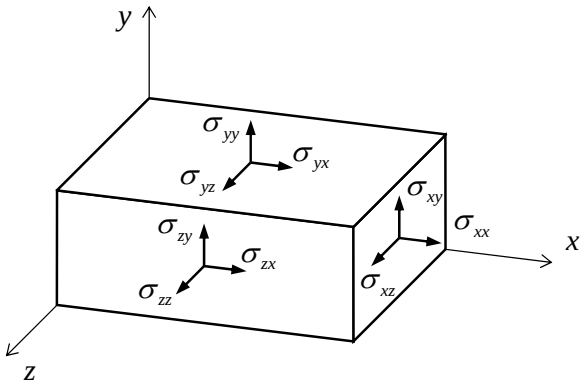

Fig. 3.8: Stresses in three dimensions.

The sign convention is: a stress component is positive when acting in positive coordinate direction on a plane with its normal in positive coordinate direction, or when working in negative coordinate direction on a plane with its normal in negative coordinate direction. It is common practice for plates loaded perpendicularly to their plane, to integrate the shear stresses σ_{xz} and σ_{yz} over the plate thickness t. The obtained shear forces v_x and v_y are stress resultants per unit plate width. The dimension of these stress resultants is force per unit length [N/m].

In these lecture notes the shear forces in a beam are expressed by a capital V and the shear forces in a plate by a small letter v. This is done to differentiate between the dimensions of the two quantities, [N] and [N/m], respectively.

The stresses σ_{xx} and σ_{yy} multiplied by the distance z from the mid-plane, contribute to the bending moments about the x-axis, and about the y-axis respectively.

Integrated over the plate thickness they produce the distributed plate bending moments m_{xx} and m_{yy} per unit plate width. Their dimension is moment per unit length, so [N]. For plates small letters m are used to emphasise the difference in dimension of the moments in beams for which capital letters M are used. Finally, the shear forces σ_{xy} and σ_{yx} multiplied by the distance z from the mid-plane deliver a contribution to the torsional moments. Integrated over the plate thickness they represent the distributed torsional moments m_{xy} and m_{yx}. These also have the dimension of force [N] (see Fig. 3.9).

The relations between the deformations on one hand and the degrees of freedom on the other hand, are called *kinematic equations*. The relation between the deformations and the stress resultants, represent the material behaviour and are called *constitutive equations*. The stress resultants are related to the loads via *equilibrium equations*. In Fig. 3.10 a scheme of these relations is indicated.

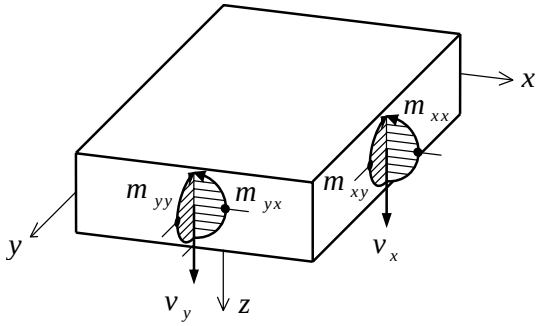

Fig. 3.9: Stress quantities in the plate; the drawn quantities are positive.

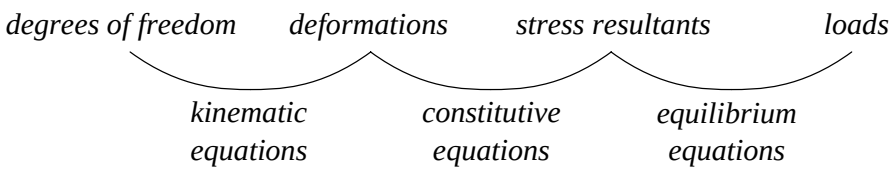

Fig. 3.10: Relation scheme.

3.2.2 Suppositions

The analysis of plates is based on suppositions, which are comparable to the suppositions made in the beam theory:

1. No membrane forces (extensional forces) will occur due to support constraints. The mid-plane of the slab will remain strainless after applying the load ($w << t$).

2. It is assumed that a straight line normal to the mid-plane of the slab in an unloaded state, stays a straight line after application of the load. However, it needs not be a normal to the mid-plane of the slab anymore. If one could bring in a needle perpendicular to the mid-plane of the unloaded slab, this needle could freely incline after loading in the x-direction (angle φ_x) and the y-direction (angle φ_y), but it would remain a straight needle. This "needle hypothesis" is the generalisation of the "plane cross-section hypothesis" in the beam theory. The sign convention for φ_x and φ_y in this part of the lecture notes is as follows: these rotations are positive if they cause a positive horizontal displacement for plate particles at positive z-positions.

3. The stress σ_{zz} in the direction normal to the mid-plane is negligibly small and is assumed to be zero. Possible small differences in the displacement w over the thickness of the slab are neglected as well.

4. The above-mentioned three suppositions are valid for thin and thick plates. For thin plates an additional assumption will be made regarding the shear deformation, which will be neglected if compared to the bending deformation.

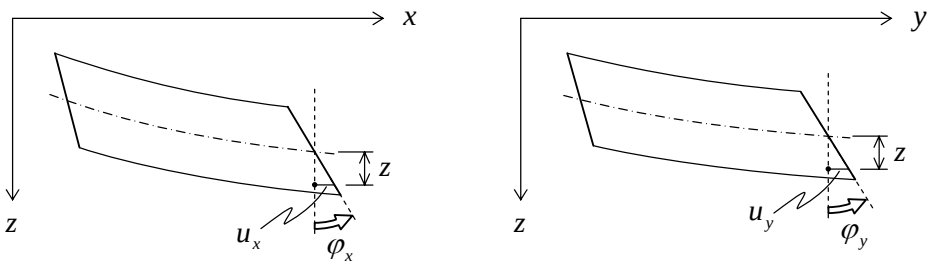

Fig. 3.11: Determination of the displacements u_x and u_y at a distance z from the mid-plane of the plate.

The "needle hypothesis" implies that the in-plane displacements u_x and u_y vary linearly over the thickness t. Because there are no strains in the mid-plane these displacements will be zero there.
From Fig. 3.11 it then follows that u_x and u_y can be expressed in the rotations φ_x and φ_y:

$$\begin{aligned} u_x &= z\,\varphi_x \\ u_y &= z\,\varphi_y \end{aligned} \tag{3.13}$$

The sign convention for the rotation in this chapter is: a rotation is positive if it causes a positive horizontal displacement for a positive z-value. The externally distributed moment loads q_x and q_y mentioned before have a positive sign if acting in the direction φ_x and φ_y respectively.

3.2.3 Basic equations

We will formulate the three basic equations in the following order: *kinematic equations*, *constitutive equations* and *equilibrium equations*.

Kinematic equations
The kinematic equations describe the relation between the displacements and the deformations. Fig. 3.12 shows three views of an elementary block with the dimensions dx, dy and dz. The dashed line represents the block in an unloaded state and the solid line in the deformed state. From Fig. 3.12 as a definition for the strains and shear angles it follows:

$$\begin{aligned} \varepsilon_{xx} &= \frac{\partial u_x}{\partial x} \\ \varepsilon_{yy} &= \frac{\partial u_y}{\partial y} \\ \gamma_{xy} &= \frac{\partial u_x}{\partial y} + \frac{\partial u_y}{\partial x} \\ \gamma_{xz} &= \frac{\partial u_x}{\partial z} + \frac{\partial w}{\partial x} \\ \gamma_{yz} &= \frac{\partial u_y}{\partial z} + \frac{\partial w}{\partial y} \end{aligned} \qquad \text{(\textit{kinematic equations})} \tag{3.14}$$

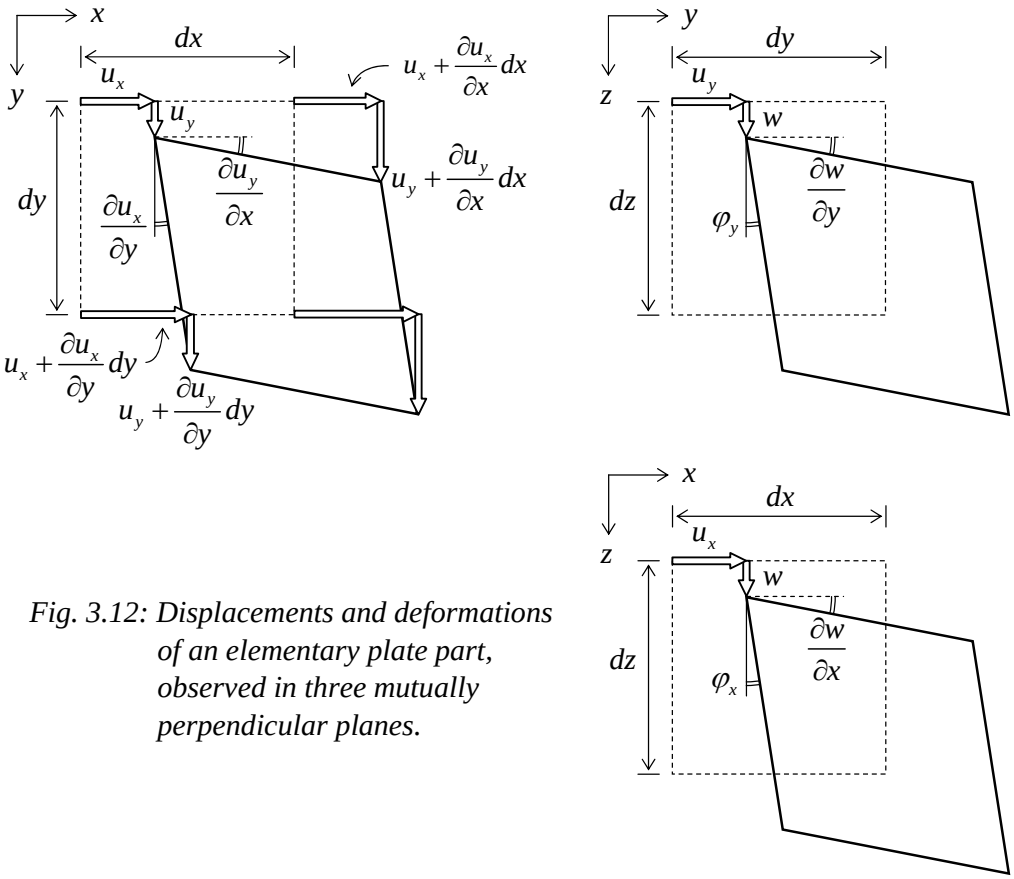

Fig. 3.12: Displacements and deformations of an elementary plate part, observed in three mutually perpendicular planes.

The strain ε_{zz} has not been included here because it does not play a role in the plate theory. Substitution of (3.13) into the kinematic equations (3.14) provides:

$$\begin{aligned}
\varepsilon_{xx} &= z\,\frac{\partial \varphi_x}{\partial x} \\
\varepsilon_{yy} &= z\,\frac{\partial \varphi_y}{\partial y} \\
\gamma_{xy} &= z\left(\frac{\partial \varphi_x}{\partial y} + \frac{\partial \varphi_y}{\partial x}\right) \\
\gamma_{xz} &= \varphi_x + \frac{\partial w}{\partial x} \\
\gamma_{yz} &= \varphi_y + \frac{\partial w}{\partial y}
\end{aligned} \tag{3.15}$$

The result of the made assumptions is that all the five strains are formulated in the three quantities φ_x, φ_y and w. These degrees of freedom are functions of x and y, i.e. of the position in the mid-plane of the plate. Then the strains γ_{xz} and γ_{yz}, which are associated with the stresses of the shear forces, are independent of z. They are constant over the thickness as a consequence of the "needle hypothesis" and hereafter we will denote them as γ_x and γ_y, i.e.:

$$\gamma_x = \varphi_x + \frac{\partial w}{\partial x}$$
$$\gamma_y = \varphi_y + \frac{\partial w}{\partial y} \tag{3.16}$$

The other three strains ε_{xx}, ε_{yy} and γ_{xy} are not only dependent on x and y (the position in the mid-plane) but also on z. We find that they vary linearly over the thickness and are zero in the mid-plane. We now introduce three curvatures κ_{xx}, κ_{yy} and ρ_{xy} and redefine the three strains in the horizontal plane:

$$\varepsilon_{xx} = z\,\kappa_{xx}$$
$$\varepsilon_{yy} = z\,\kappa_{yy} \tag{3.17}$$
$$\gamma_{xy} = z\,\rho_{xy}$$

The three curvatures in (3.17) and the two shear deformations in (3.16) together are five deformations that in general govern the plate problem. Their relations to the three degrees of freedom are the kinematic equations:

$$\kappa_{xx} = \frac{\partial \varphi_x}{\partial x}$$
$$\kappa_{yy} = \frac{\partial \varphi_y}{\partial y}$$
$$\rho_{xy} = \frac{\partial \varphi_x}{\partial y} + \frac{\partial \varphi_y}{\partial x}$$
$$\gamma_{xz} = \varphi_x + \frac{\partial w}{\partial x}$$
$$\gamma_{yz} = \varphi_y + \frac{\partial w}{\partial y}$$

(*kinematic equations*) (3.18)

Constitutive equations

For each horizontal layer of the plate at a distance z of the mid-plane and with thickness dz it is true that the normal stress σ_{zz} is zero. This implies that all layers are in a state of plane stress, so we can apply the constitutive relations (1.13):

$$\sigma_{xx} = \frac{E}{1-\upsilon^2}(\varepsilon_{xx} + \upsilon\,\varepsilon_{yy})$$
$$\sigma_{yy} = \frac{E}{1-\upsilon^2}(\varepsilon_{yy} + \upsilon\,\varepsilon_{xx}) \tag{3.19}$$
$$\sigma_{xy} = \frac{E}{2(1+\upsilon)}\gamma_{xy}$$

As the normal stresses are functions of the z-coordinate, they provide bending moments per unit length:

$$m_{xx} = \int_{-t/2}^{t/2} z\,\sigma_{xx}\,dz \qquad [\mathrm{Nm/m}]$$
$$m_{yy} = \int_{-t/2}^{t/2} z\,\sigma_{yy}\,dz \qquad [\mathrm{Nm/m}] \tag{3.20}$$

Also the shear stress σ_{xy} is a function of the z-coordinate, such that now a resulting torsional moment is obtained:

$$m_{xy} = \int_{-t/2}^{t/2} z\,\sigma_{xy}\,dz \qquad [\mathrm{Nm/m}] \tag{3.21}$$

Because $\sigma_{yx} = \sigma_{xy}$ also the following is true: $m_{xy} = m_{yx}$. Positive values of the moments discussed above are shown in Fig. 3.9. A positive moment gives positive stresses in layers with a positive z-coordination. The sign convention for stresses is given in section 1.2. Substitution of (3.19) and accounting for (3.15) and (3.17) changes these equations into:

$$\begin{aligned} m_{xx} &= D\left(\kappa_{xx} + \upsilon\,\kappa_{yy}\right) \\ m_{yy} &= D\left(\kappa_{yy} + \upsilon\,\kappa_{xx}\right) \\ m_{xy} &= \frac{1}{2} D\left(1-\upsilon\right)\rho_{xy} \end{aligned} \tag{3.22}$$

in which:

$$D = \frac{E\,t^3}{12\left(1-\upsilon^2\right)} \tag{3.23}$$

is called the *plate stiffness*. If we make use of the matrix notation, equation (3.22) reads:

$$\begin{Bmatrix} m_{xx} \\ m_{yy} \\ m_{xy} \end{Bmatrix} = D \begin{bmatrix} 1 & \upsilon & 0 \\ \upsilon & 1 & 0 \\ 0 & 0 & (1-\upsilon)/2 \end{bmatrix} \begin{Bmatrix} \kappa_{xx} \\ \kappa_{yy} \\ \rho_{xy} \end{Bmatrix} \tag{3.24}$$

The correspondence with (1.13) for a plate in plane stress is obvious. In many standard textbooks a quantity κ_{xy} is used, which is equal to $\frac{1}{2}\rho_{xy}$. So, we can write:

$$m_{xy} = D\left(1-\upsilon\right)\kappa_{xy} \tag{3.24a}$$

In Fig. 3.13 the relation between curvatures and moments is visualized for a Poisson's ratio that is zero. The rigidity matrix in (3.24) then becomes a diagonal matrix, which means that bending in x-direction, bending in y-direction and torsion are uncoupled phenomena. In Fig. 3.14 the deformations are shown for a Poisson's ratio with a value unequal to zero.

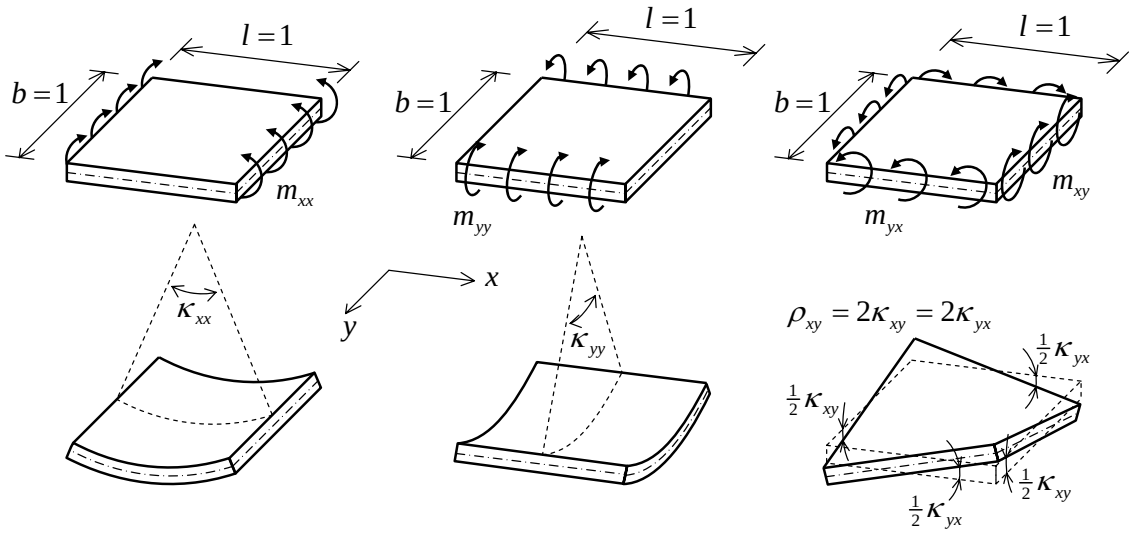

Fig. 3.13: Stress resultants and deformations due to bending in a plate without lateral contraction.

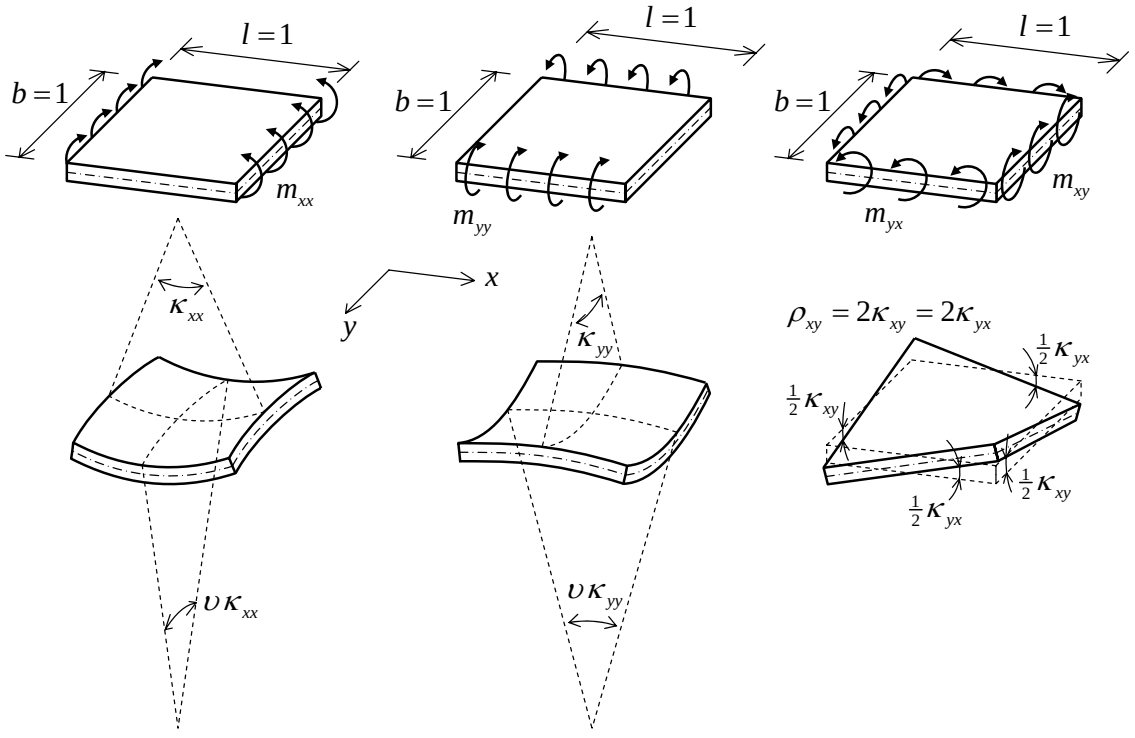

Fig. 3.14: Stress resultants and deformations due to bending in a plate with lateral contraction.

In many cases in structural engineering the slabs are not homogeneous and isotropic, for instance a bridge which is built up of I - or T -beams in span direction on top of which a thin concrete deck layer is casted in-situ, see Fig. 3.15. Now five different stiffnesses must be determined, being D_{xx}, D_{yy}, D_{υ}, D_{xy} and D_{yx} of which D_{yy} is much smaller than D_{xx} and D_{yx} much smaller than D_{xy}:

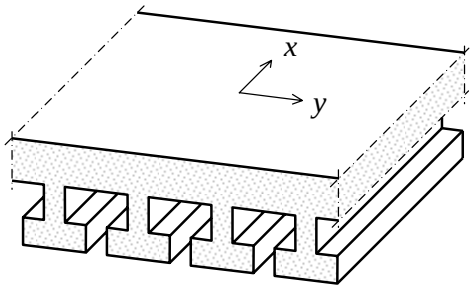

Fig. 3.15: Example of a structure that can be considered as an orthotropic plate.

$$\begin{aligned} m_{xx} &= D_{xx}\,\kappa_{xx} \\ m_{yy} &= D_{yy}\,\kappa_{yy} \\ m_{xy} &= D_{xy}\,\kappa_{xy} \\ m_{yx} &= D_{yx}\,\kappa_{yx} \end{aligned} \tag{3.25}$$

and:

$$D_{\upsilon} = \upsilon\, D_{yy} \qquad \text{(assumed that } D_{yy} << D_{xx}\text{)}$$

If we define the average quantities:

$$\begin{aligned} \bar{m}_{xy} &= \left(m_{xy} + m_{yx}\right)/2 \\ \bar{D}_{xy} &= \left(D_{xy} + D_{yx}\right)/2 \end{aligned}$$

We can replace (3.24) by:

$$\begin{Bmatrix} m_{xx} \\ m_{yy} \\ \bar{m}_{xy} \end{Bmatrix} = \begin{bmatrix} D_{xx} & D_{\upsilon} & 0 \\ D_{\upsilon} & D_{yy} & 0 \\ 0 & 0 & \frac{1}{2}\bar{D}_{xy} \end{bmatrix} \begin{Bmatrix} \kappa_{xx} \\ \kappa_{yy} \\ \rho_{xy} \end{Bmatrix} \tag{3.26}$$

Now we proceed to the vertical shear stresses σ_{xz} and σ_{yz}. From beam theory we know that they have a parabolic distribution over the thickness and integration over the thickness yields the shear forces v_x and v_y per unit length. Also from the beam theory we know (see chapter 2) that a relation exits between the shear forces v_x and v_y and the shear deformations γ_x and γ_y:

$$\begin{aligned} v_x &= D_{\gamma}\,\gamma_x \\ v_y &= D_{\gamma}\,\gamma_y \end{aligned} \tag{3.27}$$

in which:

$$D_{\gamma} = Gt/\eta \tag{3.28}$$

where:

$$G = \frac{E}{2(1+\upsilon)}$$

$\eta = 6/5$ (value of shape factor for rectangle)

The equations (3.24) and (3.27) together form the constitutive equations for a plate with bending and shear deformation:

$$\begin{aligned} m_{xx} &= D\left(\kappa_{xx} + \upsilon\,\kappa_{yy}\right) \\ m_{yy} &= D\left(\kappa_{yy} + \upsilon\,\kappa_{xx}\right) \\ m_{xy} &= \frac{1}{2} D(1-\upsilon)\,\rho_{xy} \\ v_x &= D_\gamma\,\gamma_x \\ v_y &= D_\gamma\,\gamma_y \end{aligned}$$

(*constitutive equations*) (3.29)

Herein $D = Et^3/\{12(1-\upsilon^2)\}$, the stiffness term $D(1-\upsilon)/2$ for torsion can be written as $Gt^3/12$ and $D_\gamma = Gt/\eta$.

Equilibrium equations

In the preceding sections we determined the kinematic relations between three degrees of freedom $(w, \varphi_x, \varphi_y)$ and five deformations $(\kappa_{xx}, \kappa_{yy}, \rho_{xy}, \gamma_x, \gamma_y)$ and the constitutive equations between these deformations and five stress resultants $(m_{xx}, m_{yy}, m_{xy}, v_x, v_y)$. Still to be determined are the equilibrium equations between the five stress resultants and three load components (p, q_x, q_y). For this purpose we consider equilibrium in the directions w, φ_x and φ_y respectively, see Fig. 3.16.

For the equilibrium in *w*-direction the infinitesimal small plate part with edges dx and dy as shown in Fig. 3.17 is referred to. The equilibrium equation contains three terms, i.e. the increase of v_x over the distance dx the increase of v_y over the distance dy and the load p.

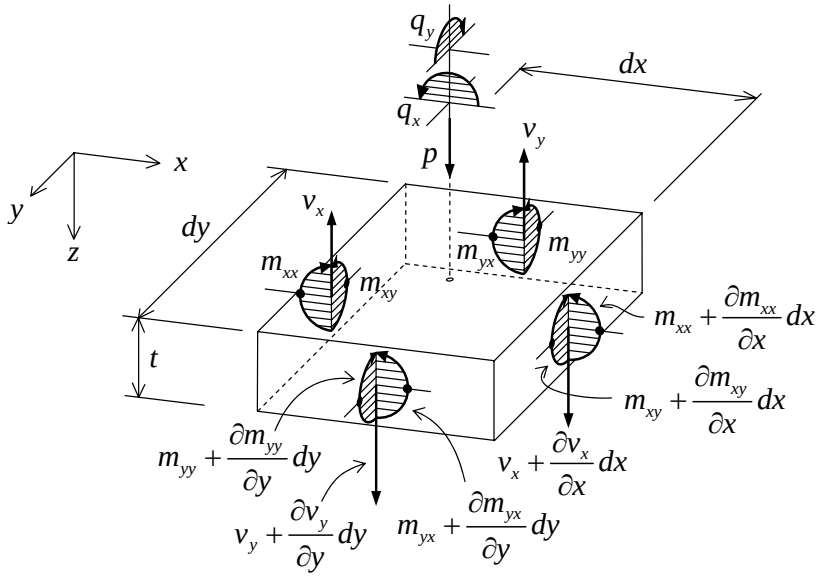

Fig. 3.16: Positive loads and stress resultants.

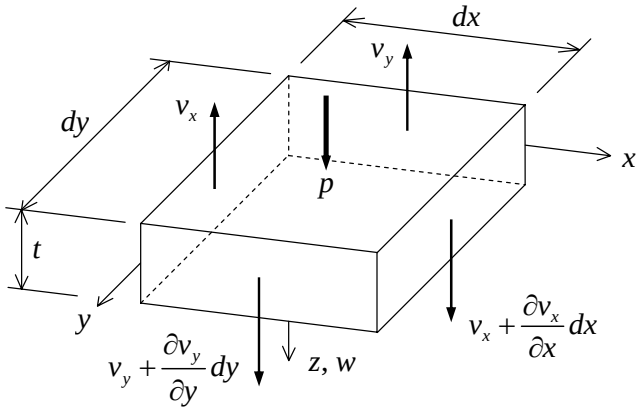

Fig. 3.17: Plate equilibrium in w-direction.

Remember that v_x and v_y are forces per unit length, so the increase must be multiplied by dy and dx respectively, and p is defined per unit area, so must be multiplied by $dx\,dy$:

$$\left(\frac{\partial v_x}{\partial x} dx\right) dy + \left(\frac{\partial v_y}{\partial y} dy\right) dx + p\, dx\, dy = 0$$

Similarly the moment equilibrium in φ_x and φ_y-direction requires (see Figs.3.18 and 3.19):

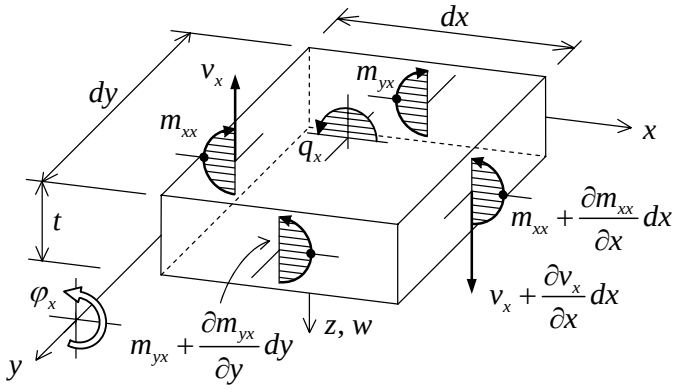

Fig. 3.18: Plate equilibrium in φ_x-direction.

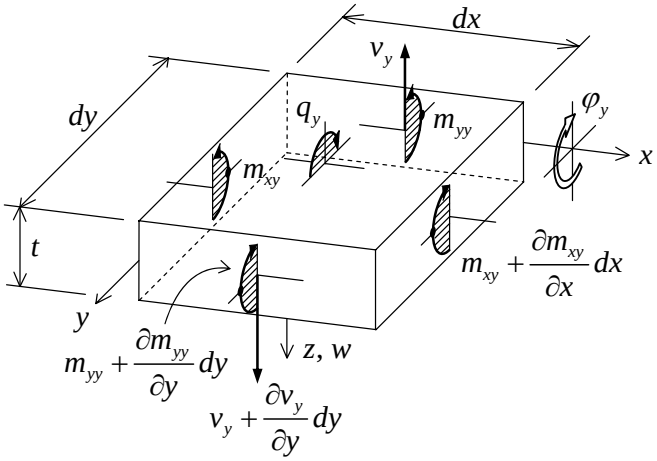

Fig. 3.19: Plate equilibrium in φ_y-direction.

$$\left(\frac{\partial m_{xx}}{\partial x}dx\right)dy+\left(\frac{\partial m_{yx}}{\partial y}dy\right)dx-\left(v_x dy\right)dx+q_x\,dx\,dy=0$$
$$\left(\frac{\partial m_{yy}}{\partial y}dy\right)dx+\left(\frac{\partial m_{xy}}{\partial x}dx\right)dy-\left(v_y dx\right)dy+q_y\,dx\,dy=0$$

Note that the increase of m_{yx} in the y-direction enters in the equilibrium equation for the φ_x-direction and so does the increase of m_{xy} in x-direction in the equation for the φ_y-direction. In all three equations the product $dx\,dy$ occurs, so it can be left out, which yields the wanted equilibrium relations:

$$\begin{aligned}&\frac{\partial v_x}{\partial x}+\frac{\partial v_y}{\partial y}+p=0\\&\frac{\partial m_{xx}}{\partial x}+\frac{\partial m_{yx}}{\partial y}-v_x+q_x=0\\&\frac{\partial m_{yy}}{\partial y}+\frac{\partial m_{xy}}{\partial x}-v_y+q_y=0\end{aligned}$$

(*equilibrium equations*) (3.30)

It is instructive to compare these equations with the two equilibrium equations for a beam in (3.3). The first two equations in (3.30) transform into (3.3) if w and φ_x are constant in the y-direction and φ_y is zero. Then $\partial v_y/\partial y$ is cancelled out in the first equation and $\partial m_{yx}/\partial_y$ in the second one. Further we see from (3.30) that for $q_x=0$ the shear force v_x is not the derivative of the bending moment m_{xx} anymore, as we know for beams. An additional derivative in the lateral direction of the torsional moment m_{yx} appears.

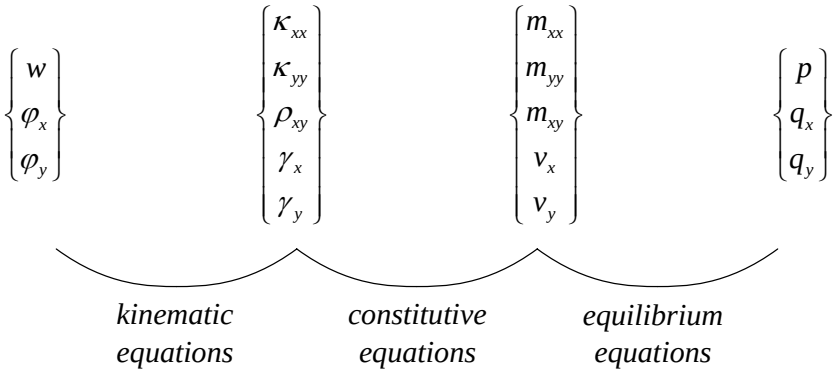

Fig. 3.20: Relation scheme for plate with both bending and shear deformation.

To summarize the previous we may say that the equilibrium equations provide the relations between the external loads and the stress resultants; the constitutive equations relate the deformations to the stress resultants, and the kinematic relations define the relations between the deformations and the degrees of freedom (as is shown in the scheme of Fig. 3.20).

3.2.4 Differential equations for thick plates

As we did before for a beam, again we substitute the kinematic relations (3.18) into the constitutive equations (3.29) and subsequently the result in the equilibrium equations (3.30). This transforms the latter in three simultaneous partial differential equations expressed in w, φ_x and φ_y:

$$
\begin{aligned}
&-D_\gamma\left(\frac{\partial^2}{\partial x^2}+\frac{\partial^2}{\partial y^2}\right)w-D_\gamma\frac{\partial\varphi_x}{\partial x}-D_\gamma\frac{\partial\varphi_y}{\partial y}=p\\
&D_\gamma\frac{\partial w}{\partial x}+\left(D_\gamma-D\frac{\partial^2}{\partial x^2}-\frac{1}{2}(1-\upsilon)D\frac{\partial^2}{\partial y^2}\right)\varphi_x-\frac{1}{2}(1+\upsilon)D\frac{\partial^2\varphi_y}{\partial x\partial y}=q_x\\
&D_\gamma\frac{\partial w}{\partial y}-\frac{1}{2}(1+\upsilon)D\frac{\partial^2}{\partial x\partial y}\varphi_x+\left(D_\gamma-\frac{1}{2}(1-\upsilon)D\frac{\partial^2}{\partial x^2}-D\frac{\partial^2}{\partial y^2}\right)\varphi_y=q_y
\end{aligned}
\qquad (3.31a)
$$

This written in matrix operator form yields:

$$
\begin{bmatrix}
-D_\gamma\left(\frac{\partial^2}{\partial x^2}+\frac{\partial^2}{\partial y^2}\right) & -D_\gamma\frac{\partial}{\partial x} & -D_\gamma\frac{\partial}{\partial y}\\
D_\gamma\frac{\partial}{\partial x} & D_\gamma-D\frac{\partial^2}{\partial x^2}-\frac{1}{2}(1-\upsilon)D\frac{\partial^2}{\partial y^2} & -\frac{1}{2}(1+\upsilon)D\frac{\partial^2}{\partial x\partial y}\\
D_\gamma\frac{\partial}{\partial y} & -\frac{1}{2}(1+\upsilon)\frac{\partial^2}{\partial x\partial y} & D_\gamma-\frac{1}{2}(1-\upsilon)D\frac{\partial^2}{\partial x^2}-D\frac{\partial^2}{\partial y^2}
\end{bmatrix}
\begin{Bmatrix} w\\ \varphi_x\\ \varphi_y \end{Bmatrix}=\begin{Bmatrix} p\\ q_x\\ q_y \end{Bmatrix}
\qquad (3.31b)
$$

These three differential equations are valid for both thick and thin plates and follow from the first three suppositions mentioned in section 3.2.2.

Remark 1

If we set q_x and q_y to zero, the last two equations of (3.30) become:

$$
v_x=\frac{\partial m_{xx}}{\partial x}+\frac{\partial m_{yx}}{\partial y}\quad;\quad v_y=\frac{\partial m_{yy}}{\partial y}+\frac{\partial m_{xy}}{\partial x}
\qquad (3.30a)
$$

Substitution of this result in the first equation of (3.30) yields:

$$
-\left(\frac{\partial^2 m_{xx}}{\partial x^2}+2\frac{\partial^2 m_{xy}}{\partial x\partial y}+\frac{\partial^2 m_{yy}}{\partial y^2}\right)=p
\qquad (3.30b)
$$

Making use of the kinematic equations (3.18) and the constitutive equations (3.22) for bending, one can transform (3.30b) into:

$$
\boxed{-\nabla^2 m=p}
\qquad (3.30c)
$$

where ∇^2 is the Laplace operator and m is the corrected sum with respect to υ of the two bending moments:

$$m = \frac{m_{xx} + m_{yy}}{1+\upsilon} \tag{3.30d}$$

Apparently, this sum of moments is an invariant with respect to the rotation of the x-y coordinate system about its origin.
We can derive another interesting equation. From the kinematic equations (3.18) and the constitutive relations (3.22) we know:

$$m = D\left(\frac{\partial \varphi_x}{\partial x} + \frac{\partial \varphi_y}{\partial y}\right) \tag{3.30e}$$

Accounting for this result the first equilibrium equation in (3.31b) becomes:

$$\boxed{-D_\gamma\left(\nabla^2 w + \frac{m}{D}\right) = p} \tag{3.30f}$$

We conclude: if only a load p occurs, one can formulate the problem of a plate (thick or thin) with the two differential equations (3.30c) and (3.30f). Written in this form one easily sees the correspondence with the beam theory, from which we derived equations (3.5a) and (3.5c).

Remark 2
The theory for thick plates was derived independently by E. Reissner (1945) and R.D. Mindlin (1951) practically at the same time, with small differences in their theories. The theory exposed here, is the theory of Mindlin. Reissner did not start from an assumed displacement field but from an assumed stress field and additionally he took into account the influence of vertical stresses σ_{zz} not equal to zero. For a Poisson's ratio equal to zero, the theories of Reissner and Mindlin are the same. For $\upsilon = 0.3$ and a span to thickness ratio 5 the values of maximum bending moment may differ 10% and of torsional moment 20%.

4 Thin plates loaded perpendicular to their plane

4.1 Theory for thin plates

In these lecture notes we will not proceed along the lines of chapter 3, because the goal is to simplify the theory and make it applicable for thin plates only. As was done earlier for beams we now assume that shear deformation is negligibly small, which allows us to state:

$$\gamma_x = 0 \quad ; \quad \gamma_y = 0 \tag{4.1}$$

Then, the kinematic relations (3.16) reveal that the rotations φ_x and φ_y are dependent on the displacement w:

$$\varphi_x = -\frac{\partial w}{\partial x} \quad ; \quad \varphi_y = -\frac{\partial w}{\partial y} \tag{4.2}$$

which reduce and transform the kinematic relations into three new ones:

$$\boxed{\begin{aligned} \kappa_{xx} &= -\frac{\partial^2 w}{\partial x^2} \\ \kappa_{yy} &= -\frac{\partial^2 w}{\partial y^2} \\ \rho_{xy} &= -2\frac{\partial^2 w}{\partial x \partial y} \end{aligned}} \quad (\textit{kinematics}) \tag{4.3}$$

If one prefers to use κ_{xy} instead of ρ_{xy}, one should use:

$$\kappa_{xy} = -\frac{\partial^2 w}{\partial x \partial y}.$$

On the basis of the differential equations (3.31) it can be shown that the shear deformation can be neglected if the thickness to span ratio is smaller than $1/5$, which is always the case in normal slabs.
The constitutive relations for the shear forces are meaningless now and must be cancelled out, which leaves us with:

$$\boxed{\begin{aligned} m_{xx} &= D\left(\kappa_{xx} + \upsilon \kappa_{yy}\right) \\ m_{yy} &= D\left(\upsilon \kappa_{xx} + \kappa_{yy}\right) \\ m_{xy} &= \frac{1}{2}\left(1-\upsilon\right) D \rho_{xy} \end{aligned}} \quad (\textit{constitution}) \tag{4.4}$$

The equilibrium equations now will drastically change. The rotations φ_x and φ_y are not independent degrees of freedom anymore, but are in a unique way related to the displacement w. In this case the load q_x or q_y can not be applied anymore. They must be set to be zero, which transforms the last two equilibrium equations in (3.30) into:

$$\begin{aligned} v_x &= \frac{\partial m_{xx}}{\partial x} + \frac{\partial m_{yx}}{\partial y} \\ v_y &= \frac{\partial m_{yy}}{\partial y} + \frac{\partial m_{xy}}{\partial x} \end{aligned} \tag{4.5}$$

Substitution of this result in the first equation of (3.30) yields:

$$\boxed{-\left(\frac{\partial^2 m_{xx}}{\partial x^2} + 2\frac{\partial^2 m_{xy}}{\partial x \partial y} + \frac{\partial^2 m_{yy}}{\partial y^2} \right) = p} \qquad (\textit{equilibrium}) \tag{4.6}$$

as was found for thick plates in case no torque loads q_x and q_y occur, see equation (3.30a). The equations (4.3), (4.4) and (4.6) govern the behaviour of thin plates. They are the generalisation for plates of the three equations (3.7), (3.8) and (3.10), which were derived for beams. So, the general relation scheme in Fig. 3.20 has been simplified to the one in Fig. 4.1.

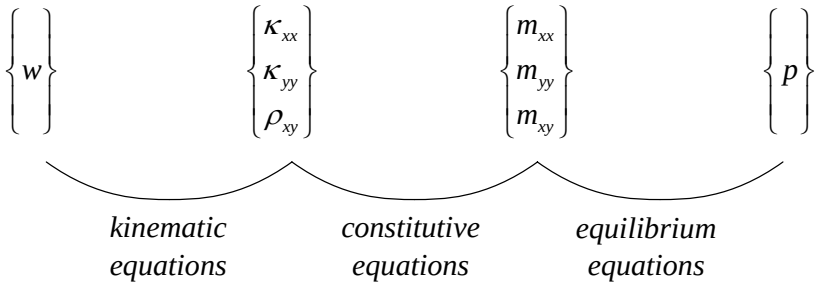

Fig. 4.1: Relation scheme for thin plates with bending deformation only.

Substitution of (4.3) into (4.4) gives:

$$\begin{aligned} m_{xx} &= -D\left(\frac{\partial^2 w}{\partial x^2} + \upsilon \frac{\partial^2 w}{\partial y^2} \right) \\ m_{yy} &= -D\left(\upsilon \frac{\partial^2 w}{\partial x^2} + \frac{\partial^2 w}{\partial y^2} \right) \\ m_{xy} &= -(1-\upsilon) D \frac{\partial^2 w}{\partial x \partial y} \end{aligned} \tag{4.7}$$

and (4.7) into (4.6) delivers a partial differential equation in w only:

$$\boxed{D\left(\frac{\partial^4}{\partial x^4}+2\frac{\partial^4}{\partial x^2\partial y^2}+\frac{\partial^4}{\partial y^4}\right)w=p} \tag{4.8a}$$

The operator in this equation has been seen earlier in chapter 2. With the Laplace operator:

$$\nabla^2=\frac{\partial^2}{\partial x^2}+\frac{\partial^2}{\partial y^2}$$

we can write:

$$\boxed{D\nabla^2\nabla^2 w=p} \tag{4.8b}$$

This differential equation is known as the *biharmonic* plate equation and was derived for the first time by Lagrange (1811).

This fourth-order differential equation must be solved with respect to the governing boundary conditions (to be discussed hereafter). Once a solution for $w(x, y)$ is found, the bending and torsional moments are calculated with the aid of (4.7) and finally the shear forces from (4.5) on basis of the obtained solution for the moments.

In (4.7) the moments are expressed in the displacement w. Then the shear forces can also be expressed in terms of the displacements. If we introduce (4.7) into (4.5) we obtain:

$$\begin{aligned} v_x &= \frac{\partial m_{xx}}{\partial x}+\frac{\partial m_{yx}}{\partial y}=-D\left(\frac{\partial^3 w}{\partial x^3}+\nu\frac{\partial^3 w}{\partial x\partial y^2}\right)-(1-\upsilon)D\frac{\partial^3 w}{\partial x\partial y^2} \quad \rightarrow \\ v_x &= -D\left(\frac{\partial^3 w}{\partial x^3}+\frac{\partial^3 w}{\partial x\partial y^2}\right)=-D\frac{\partial}{\partial x}\left(\frac{\partial^2}{\partial x^2}+\frac{\partial^2}{\partial y^2}\right)w \quad \rightarrow \\ v_x &= -D\frac{\partial}{\partial x}\nabla^2 w \end{aligned} \tag{4.9a}$$

And similarly we find:

$$v_y=-D\frac{\partial}{\partial y}\nabla^2 w \tag{4.9b}$$

The expressions (4.9) are plate generalisations of the second equation in (3.11) for the shear force in a beam.

Remark 1

The expressions (4.9) for the shear forces offer us an alternative for the derivation of the biharmonic plate equation. The equations (4.9) follow from the second and third equilibrium

equation of (3.30) for $q_x = 0$ and $q_y = 0$. Substitution of (4.9) in the first equation of (3.30) gives:

$$-\left(\frac{\partial v_x}{\partial x}+\frac{\partial v_y}{\partial y}\right)=p \quad \rightarrow \quad -D\left\{-\frac{\partial}{\partial x}\left(\frac{\partial}{\partial x}\nabla^2 w\right)-\frac{\partial}{\partial y}\left(\frac{\partial}{\partial y}\nabla^2 w\right)\right\}=p \quad \rightarrow$$

$$D\left(\frac{\partial^2}{\partial x^2}+\frac{\partial^2}{\partial y^2}\right)\nabla^2 w = p$$

In this equation we see ∇^2 repeat:

$$D\,\nabla^2\,\nabla^2\,w = p$$

which is equation (4.8b).

Remark 2

We can still show the correspondence with the beam formulas in another way. For beams it holds that:

$$\begin{aligned} -\frac{d^2M}{dx^2} &= p \\ M &= -EI\frac{d^2w}{dx^2} \end{aligned} \qquad (4.10)$$

We define again m as the sum of the two bending moments in the plate divided by $1+\upsilon$:

$$m=\frac{m_{xx}+m_{yy}}{1+\upsilon} \qquad (4.11)$$

Taking into account (3.30c) we then find that the biharmonic equation can be decomposed into:

$$-\nabla^2 m = p \qquad (4.12a)$$

$$m = -D\nabla^2 w \qquad (4.12b)$$

These two equations show the same structure as (4.10) does for beams. We can conclude again that m (the sum of m_{xx} and m_{yy}) is invariant with respect to a rotation of the set of axis about the origin.

Equation (4.12a) was obtained for thick and thin plates in (3.30c). Equation (4.12b) has a companion in (3.30f) for thick plates. If that equation is divided by D_γ, it is equal to (4.12b) for infinitely large D_γ.

Remark 3

The correspondence of the differential equation (4.8a) for plates with the differential equation:

$$EI\frac{d^4w}{dx^4} = p$$

for beams is evident.
In the first term of equation (4.8a) the load bearing action in the x-direction can be easily recognized, and in the third term in the y-direction. The second term is new, and describes the load bearing action due to torsion.

4.2 Transformation rules and principal moments.

For bending and torsional moments the same transformation rules apply for rotation in one point, as for the stresses in a plane stress state (see Fig. 4.2). For the stress components on a

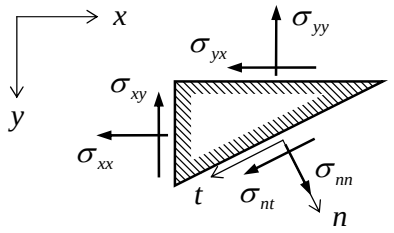

Fig. 4.2: Stress transformation.

surface of which the normal has an angle α with the x-axis, in a plane stress state, the following is true:

$$\begin{aligned}
\sigma_{nn} &= \sigma_{xx}\cos^2\alpha + 2\sigma_{xy}\sin\alpha\cos\alpha + \sigma_{yy}\sin^2\alpha \\
\sigma_{tt} &= \sigma_{xx}\sin^2\alpha - 2\sigma_{xy}\sin\alpha\cos\alpha + \sigma_{yy}\cos^2\alpha \\
\sigma_{nt} &= -\frac{1}{2}\left(\sigma_{xx} - \sigma_{yy}\right)\sin 2\alpha + \sigma_{xy}\cos 2\alpha
\end{aligned} \tag{4.13}$$

By integration the corresponding expressions for the bending and torsional moments can be obtained:

$$\begin{aligned}
m_{nn} &= \int_{-t/2}^{t/2} \sigma_{nn} z\, dz = m_{xx}\cos^2\alpha + 2m_{xy}\sin\alpha\cos\alpha + m_{yy}\sin^2\alpha \\
m_{tt} &= \int_{-t/2}^{t/2} \sigma_{tt} z\, dz = m_{xx}\sin^2\alpha - 2m_{xy}\sin\alpha\cos\alpha + m_{yy}\cos^2\alpha \\
m_{nt} &= \int_{-t/2}^{t/2} \sigma_{nt} z\, dz = -\frac{1}{2}\left(m_{xx} - m_{yy}\right)\sin 2\alpha + m_{xy}\sin\alpha\cos 2\alpha
\end{aligned} \tag{4.14}$$

The directions of n and t, for the angle α, in which m_{nt} is zero and m_{nn} and m_{tt} adopt extreme values, are called principal directions. In this case the moments m_{nn} and m_{tt} are the principal moments.
Instead of formulae (4.13) one may also apply the graphical approach using Mohr's circle.

4.3 Principal shear forces

The shear forces are:

$$v_x = -D\frac{\partial}{\partial x}\nabla^2 w \qquad ; \qquad v_y = -D\frac{\partial}{\partial y}\nabla^2 w \tag{4.15}$$

With reference to (4.12b) we can replace $-D\nabla^2 w$ by the moment m as defined in (4.11). Obviously the shear force is the derivative of m. In order to find v_x, the derivative $\partial/\partial x$ has to be determined and for v_y the derivative $\partial/\partial y$. In an arbitrary direction n the shear force is:

$$v_n = \frac{\partial}{\partial n} m \tag{4.16}$$

The function m can be regarded as a "hill" above the plate surface (see Fig. 4.3). In the direction of the contour lines for constant values of m, the shear force v_t is equal to zero and in the direction of the slope, perpendicular to the contour lines, the shear force v_n obtains its maximal value. This is the principal value of the shear force or, in short, the *principal shear force.*

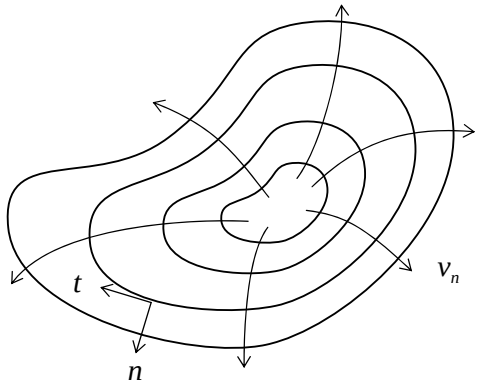

Fig. 4.3: Rain-shower analogy.

The trajectories of v_n are orthogonal to the contour lines of m. The trajectories of v_n may be compared to the streamlines of water flowing away after a rain shower on a mountain. That is why the term "rain shower analogy" is sometimes used. In the same way one may conclude that a load between two trajectories will flow to the edge without passing the flow lines (trajectories).
Fig. 4.4 shows two triangular plate parts with the shear forces acting on their edges. An arrow coming towards you (point = the front) indicates shear forces on faces with a negative normal vector; an arrow moving away (cross = the back) indicates the shear forces on faces with a positive normal vector. From the vertical equilibrium of the triangular parts it follows:

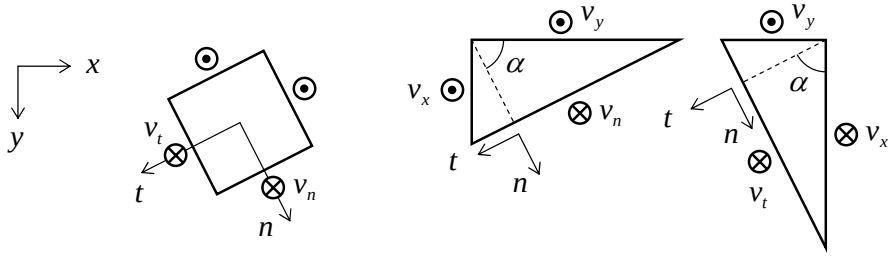

Fig. 4.4: Elementary plate parts.

$$\begin{aligned} v_n &= \ v_x \cos\alpha + v_y \sin\alpha \\ v_t &= -v_x \sin\alpha + v_y \cos\alpha \end{aligned} \tag{4.17}$$

To determine the value and direction of the principal shear force v_n we require that: $\partial v_n / \partial \alpha = 0$. This leads to:

$$-v_x \sin\alpha + v_y \cos\alpha = 0 \tag{4.18}$$

Note that this condition is equal to:

$$v_t = 0 \tag{4.19}$$

From (4.18) it follows:

$$\tan\alpha = \frac{v_y}{v_x} \tag{4.20}$$

To be able to calculate the value of the principal shear force v_n, first we determine (see Fig. 4.5):

$$\sin\alpha = \frac{v_y}{\sqrt{v_x^2 + v_y^2}} \quad ; \quad \cos\alpha = \frac{v_x}{\sqrt{v_x^2 + v_y^2}}$$

The principal shear force is:

$$\begin{aligned} v_n &= \cos\alpha\, v_x + \sin\alpha\, v_y \\ v_n &= \sqrt{v_x^2 + v_y^2} \end{aligned} \tag{4.21}$$

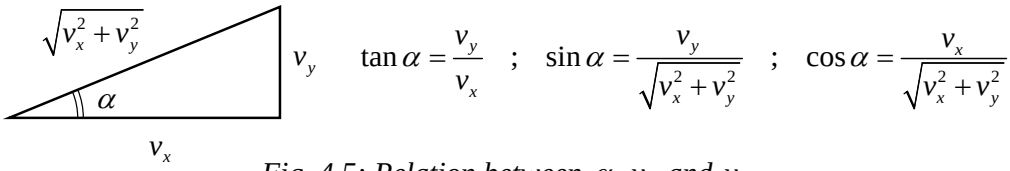

Fig. 4.5: Relation between α, v_x and v_y.

4.4 Boundary conditions for plates

In the biharmonic equation the deflection w is present as derivatives of the fourth order in the x-direction as well as the y-direction. It is a linear equation of the fourth order, of the so-called elliptical type. For a rectangular plate now in both directions four boundary conditions can be specified, two per edge.
Along an edge of a plate we can specify two out of four quantities: w^0, φ^0, f_w^0 and f_φ^0. The quantity w^0 is a given value of the displacement w and φ^0 is a given value for the rotation of the edge (for edge x = constant in φ_x-direction and for edge y = constant in φ_y-direction). The quantity f_w^0 is a given distributed line load in w-direction and f_φ^0 is a given distributed moment in φ-direction (φ_x or φ_y for edge x = constant and edge y = constant respectively). Note that the sign convention for f_w^0 and f_φ^0 is different from the sign convention for shear forces and bending moments. Their sign convention is the same as for w and φ respectively. If we specify w^0, then f_w^0 cannot be specified simultaneously. If we specify w^0, f_w will be the computed support reaction. If we specify f_w^0 on a non-restrained edge, then w will be the computed displacement of the free edge. Similarly f_φ is a support reaction if φ^0 is specified and φ is the computed rotation if f_φ^0 is specified.

4.4.1 Clamped edge for thin plates

When the plate is totally restrained along the edge $x = a$ (see Fig. 4.6), the following kinematic boundary conditions hold for that edge: $w^0 = 0;\ \varphi^0 = 0$.

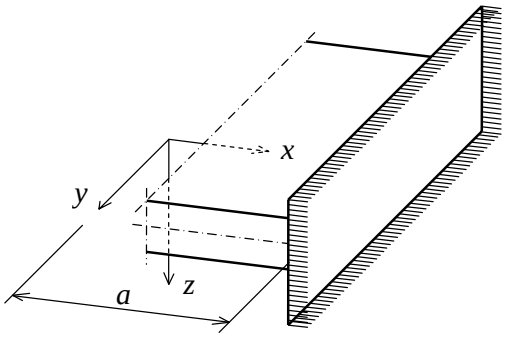

Fig. 4.6: Restrained edge.

Because for this edge $\varphi^0 = -\partial w/\partial x$, now the following is valid for a thin plate:

$$x = a \quad \rightarrow \quad \begin{cases} w = 0 \\ \dfrac{\partial w}{\partial x} = 0 \end{cases}$$

These are both kinematic conditions. Analogously along a restrained edge $y = b$:

$$y = b \quad \rightarrow \quad \begin{cases} w = 0 \\ \dfrac{\partial w}{\partial y} = 0 \end{cases}$$

We will also consider the support reactions in the edge $x = a$ that occur at the kinematic boundary conditions. At the restrained edge, the torsion of the plate is zero, so no torsional moment occurs. The torsional moment is zero because $\partial w / \partial x$ has to be zero for every value of y. Therefore the deformation $\partial^2 w / \partial x \partial y$ has to be zero and so m_{xy} does not arise.
Only a bending moment and a shear force are transmitted to such a support. In Fig. 4.7 such an edge is depicted parallel to the y-axis, such that a moment m_{xx} and a shear force v_x are transmitted.

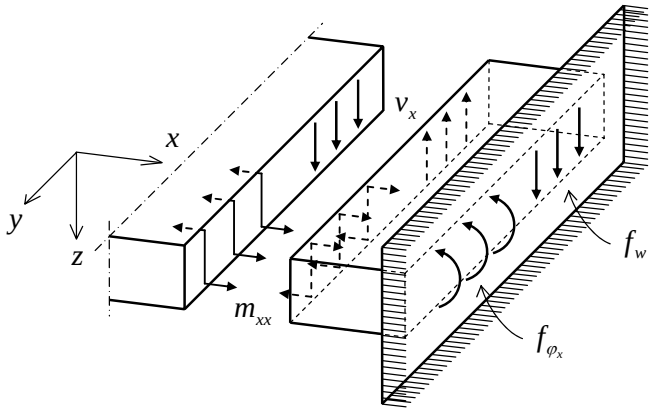

Fig. 4.7: Restrained edge with corresponding reactions.

The distributed support force f_w is positive when the force is acting in the w-direction and the distributed fixed-end moment f_{φ_x} is positive when it acts in positive φ_x-direction. Apparently the fixed-end moment f_{φ_x} is equal to the moment m_{xx} and the support reaction f_w is equal to shear force v_x.

In Fig. 4.7 only a small part of the plate and its equilibrium are considered along the edge. This approach is generally recommended for formulating boundary or transitional conditions.

4.4.2 Simply supported edge for thin plates

If a plate is simply supported along the edge $x = a$ (see Fig. 4.8), a condition is valid for the deflection w^0 and for the moment f_φ^0 that may act on the edge externally. Usually f_φ^0 is zero:

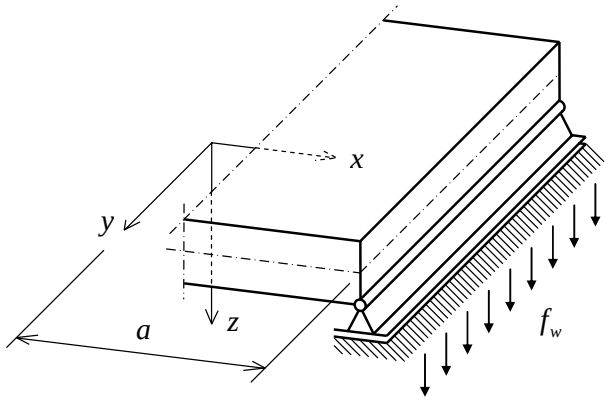

Fig. 4.8: Simply supported edge.

$$x = a \quad \rightarrow \quad \begin{cases} w^0 = 0 \\ f_\varphi^0 = 0 \end{cases}$$

This is one kinematical boundary condition ($w^0 = 0$) and one dynamic boundary condition ($f_\varphi^0 = 0$).
The dynamic condition implies $m_{xx} = f_\varphi^0 = 0$. With relation (4.7) we can turn the dynamic condition into a requirement for *w*:

$$\frac{\partial^2 w}{\partial x^2} + \upsilon \frac{\partial^2 w}{\partial y^2} = -\frac{f_\varphi^0}{D} = 0$$

In which $\partial^2 w / \partial y^2$ is zero when w is zero for every value of y on the straight line $x = a$. The two conditions now are:

$$x = a \quad \rightarrow \quad \begin{cases} w = 0 \\ \dfrac{\partial^2 w}{\partial x^2} = 0 \end{cases}$$

Similarly for a simple support in $y = b$ the following is true:

$$y = b \quad \rightarrow \quad \begin{cases} w = 0 \\ \dfrac{\partial^2 w}{\partial y^2} = 0 \end{cases}$$

The kinematic boundary condition leads to a support reaction f_w. Doing the calculation for f_w we will have to take into account the part the torsional moment plays. In a simply supported edge the bending moment perpendicular to the edge is zero, but not the shear force. In general, also the torsional moment may have a value not equal to zero, because the slope perpendicular to the edge ($\partial w / \partial x$) may vary along the edge in the y -direction and thus will create a deformation $\partial^2 w / \partial x \partial y$.
We will consider a similar edge as in the fixed case for determination of the support reaction f_w. In Fig. 4.9 such a simply supported edge is drawn. The connecting plate transmits a shear force v_x and a torsional moment m_{xy} to this support, but the support can only apply a distributed force f_w onto the plate. The questions arise what happens to m_{xy} and if f_w still

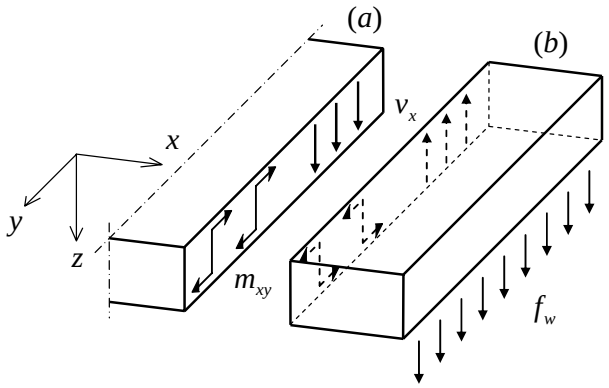

Fig. 4.9: Simply supported edge with corresponding reactions.

has the same value as v_x (as is the case for a fully fixed edge).
To answer these questions we will have to expand on the phenomenon of torsion. First we will consider a plate part in which the torsional moment is constant.
To elucidate, in Fig. 4.10 the parts (a) and (b) of Fig. 4.9 are drawn again, but now stuck together.

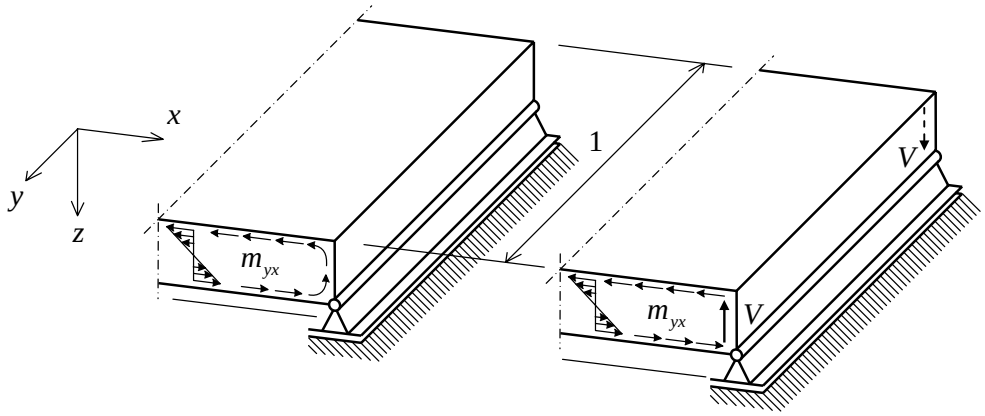

Fig. 4.10: Torsion at the edges.

In the section perpendicular to the support a positive torsional moment m_{yx} is present. In Fig. 4.10 a positive torsional moment is represented. The torsional stresses varying linearly over the plate thickness in a section perpendicular to the edge cannot act on the free edge. Therefore, the torsional shear stresses have to run around at the ends, which happen within a width of approximately the size of the half thickness of the plate. In this part of the plate, the shear stresses result in a concentrated vertical force V. In a section on the side of the positive y-direction (the front side in Fig. 4.10) this force faces upwards, in a section on the side of the negative y-direction (the rear side) this force is facing downwards.
The magnitude of the concentrated force V can be calculated using the part of the plate represented in Fig. 4.11.

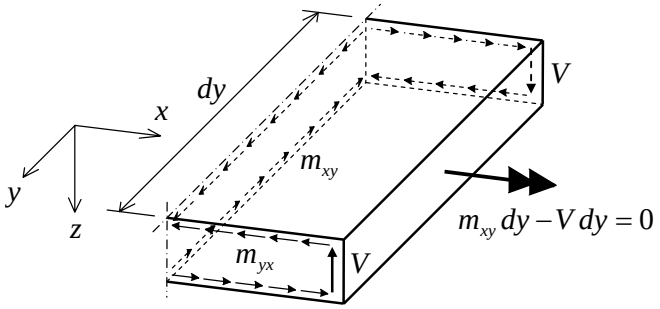

Fig. 4.11: Torque equilibrium about the x-axis.

In the sections parallel to the x-axis a moment m_{yx} is present and in the sections parallel to the y-axis a moment m_{xy} is present (these are of the same magnitude in isotropic plates, but may not be in orthotropic plates). We now consider the torque equilibrium about the x-axis. In this equilibrium m_{xy} and V play a part, which directly leads to (see Fig. 4.11):

$$V = m_{xy}$$

The vertical force V that belongs to the shear stresses running round due to m_{yx} has the numerical magnitude of m_{xy}! Analogously the magnitude of the force V can be demonstrated in a section parallel to the y-axis perpendicular to a free edge, which is parallel to the x-axis. In this case, it concerns the shear stresses flowing round that belong to the moment m_{xy} and the numeric magnitude of the vertical force in this case is equal to m_{yx}.
After we know what happens when a constant torsional moment occurs, the expansion to a varying torsional moment is not very difficult anymore.

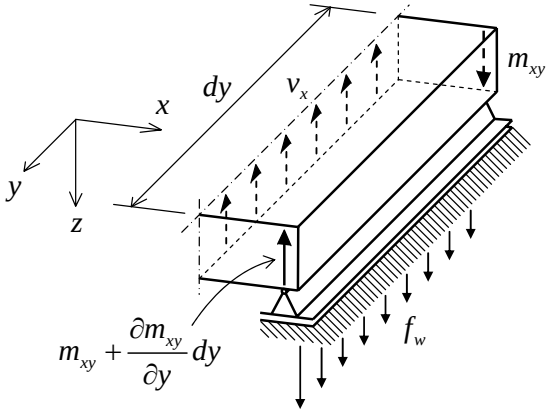

Fig. 4.12: Varying torsional moments.

In Fig. 4.12 a part of the edge is represented again with all the vertical forces that act on it. Over a distance dy the concentrated vertical shear force has changed with the amount:

$$\frac{\partial m_{xy}}{\partial y} dy$$

On account of the vertical equilibrium the following is true:

$$f_w = v_x + \frac{\partial m_{xy}}{\partial y} \tag{4.22a}$$

In this form f_w is sometimes called the *Kirchhoff shear force*. However, the use of the word shear force is incorrect here, because f_w is an external line load acting on the plate.
Analogously the line load in an edge parallel to the x-axis can be found:

$$f_w = v_y + \frac{\partial m_{yx}}{\partial x} \tag{4.22b}$$

The torsional moment turns out to be resisted in the form of extra support reactions.
The expressions (4.22a) and (4.22b) for f_w are valid for supports in which the outward-pointing normal on the plate edge points in the positive x-direction, respectively y-direction. Considering the definition of f_w (positive when acting in the positive w-direction) the sign of the right-hand term must change if the normal on the plate edge is pointing in the negative direction:

$$f_w = -\left(v_x + \frac{\partial m_{xy}}{\partial y} \right) \quad ; \quad f_w = -\left(v_y + \frac{\partial m_{yx}}{\partial x} \right) \tag{4.23}$$

The formulas for f_w provide the magnitude of the *distributed line load* per unit length on the edge. Deriving these formulas showed that only the *increase* of the torsional moment plays a part. The torsional moment itself does appear in the equation for the vertical equilibrium twice, but with an opposite sign and therefore disappears. However, at the end of the edge a special situation occurs. In Fig. 4.13 a corner of a plate is represented in which two simply

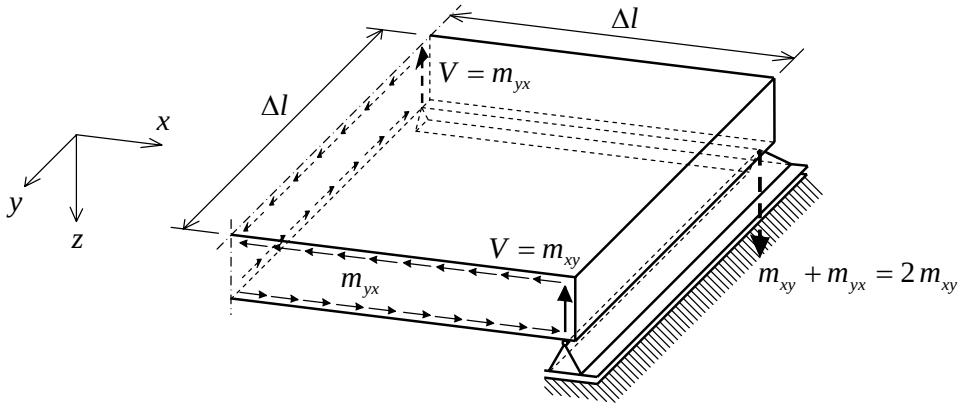

Fig. 4.13: Simply supported plate corner.

supported edges come together. The plate dimensions Δl are thought to be small. In the vertical equilibrium of this plate particle in the corner of the plate, two concentrated loads $V = m_{xy}$ and $V = m_{yx}$ play a role, together with the distributed support reactions f_w and load p on the plate. f_w must be multiplied by Δl and p by $(\Delta l)^2$. If we allow Δl to approach zero, the contribution of f_w and p vanishes. Only the forces $V = m_{xy}$ and $V = m_{yx}$ persist. Because the vertical equilibrium of this plate corner has to be ensured, there has to be a concentrated corner reaction of the magnitude $m_{xy} + m_{yx}$. For isotropic plates $m_{xy} = m_{yx}$, so the corner reaction is $2\,m_{xy}$. Depending on the sign of the torsional moment this reaction force can be either compressive or tensile.

4.4.3 Free edge for thin plates

A free edge is not supported at all. Again, the edge previously drawn simply supported, but now without support is the starting point. Concerning the appearing stress picture, such an edge is comparable to a simply supported edge, the only difference being that now w is not prescribed, but f_w^0 is. The structural engineer could also place a line load f_φ^0 on the edge in which case one will get two equilibrium (dynamic) boundary conditions:

$$x = a \quad \rightarrow \quad \begin{cases} m_{xx} = f_\varphi^0 \\ v_x + \dfrac{\partial m_{xy}}{\partial y} = f_w^0 \end{cases} \tag{4.24}$$

With (4.5) we can determine:

$$\frac{\partial m_{xx}}{\partial x}+\frac{\partial\left(m_{xy}+m_{xy}\right)}{\partial y}=f_w^0$$

With the third constitutive equation of (4.7) this becomes:

$$-D\left\{\frac{\partial^3 w}{\partial x^3}+\left(2-\upsilon\right)\frac{\partial^3 w}{\partial x\partial y^2}\right\}=f_w^0 \tag{4.25}$$

For (4.24) then we can write:

$$x=a \quad\rightarrow\quad \begin{cases}\dfrac{\partial^2 w}{\partial x^2}+\upsilon\dfrac{\partial^2 w}{\partial y^2}=-f_\varphi^0/D\\ \dfrac{\partial^3 w}{\partial x^3}+\left(2-\upsilon\right)\dfrac{\partial^3 w}{\partial x\partial y^2}=-f_w^0/D\end{cases} \tag{4.26}$$

In the case of the free edge not being loaded at all ($f_\varphi^0=0$, $f_w^0=0$) both right-hand members of (4.26) will be zero.

4.4.4 Sudden change in thickness in a thin plate

Along the connecting line between two parts of the plate of different thickness (and therefore stiffness) a similar event takes place as with the free and the simply supported edges. In a section perpendicular to the connecting line the magnitude of the torsional moment abruptly changes, see Fig. 4.14. At the position of the connecting line a vertical force acts. The size of this force is equal to the difference of the two torsional moments left and right of the connecting line.

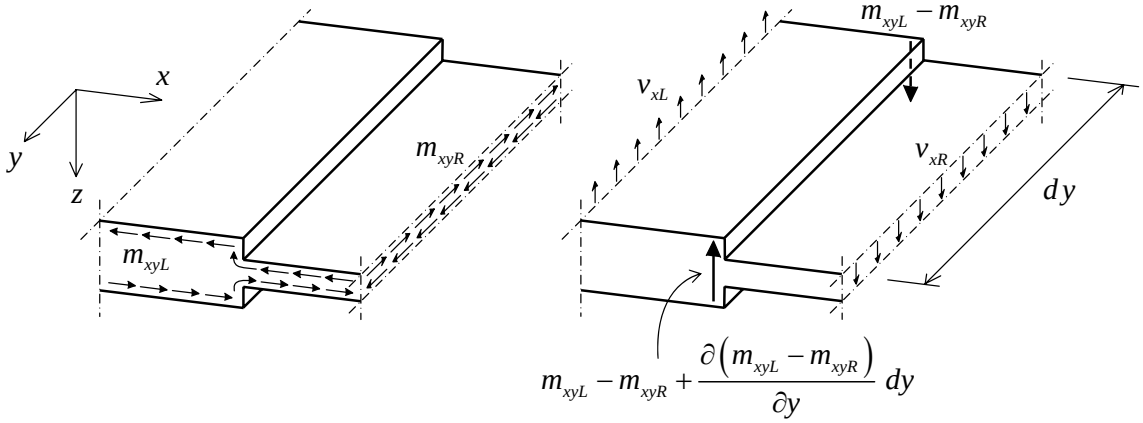

Fig. 4.14: Sudden change in thickness.

If both plate thicknesses are equal, the difference of the two torsional moments is zero and no force will occur, and if one of the thicknesses is zero (a free edge) the full torsional moment of the present plate part remains. The vertical equilibrium of the shown plate part requires:

$$-v_{xL} - \frac{\partial}{\partial y}\left(m_{xyL} - m_{xyR}\right) + v_{xR} = 0 \quad \rightarrow \quad \left(v_{xL} + \frac{\partial m_{xyL}}{\partial y}\right) - \left(v_{xR} + \frac{\partial m_{xyR}}{\partial y}\right) = 0$$

where L and R refer to the left plate part and the right plate part, respectively. Here the first term of the equation is exactly f_{wL} for the plate part on the left-hand side for an edge with its normal in a positive x-direction. The second term, including the minus sign, is f_{wR} for the right-hand plate part for an edge with its normal pointing in a negative x-direction. This provides us with:

$$f_{wL} + f_{wR} = 0$$

The sum of two line loads in a connection between the two plate parts is zero without any external loads being applied. If an external load f_w^0 is applied in the connection, the condition then becomes:

$$f_{wL} + f_{wR} = f_w^0$$

5 Applications of the thin plate theory

5.1 Basic cases for bending

A cylindrical plane of deflection
We will now consider a cylindrical deflection (see Fig. 5.1) of the form:

$$w = C\, x\,(a - x)$$

for a plate with a Poisson's ratio υ not equal to zero. Substituting this expression into the differential equation (4.8) gives: $p = 0$. This means that the function w is a solution to the differential equation in the absence of a distributed load p. The deflection is zero along the straight edges $x = 0$ and $x = a$. This is where the supports can be thought.

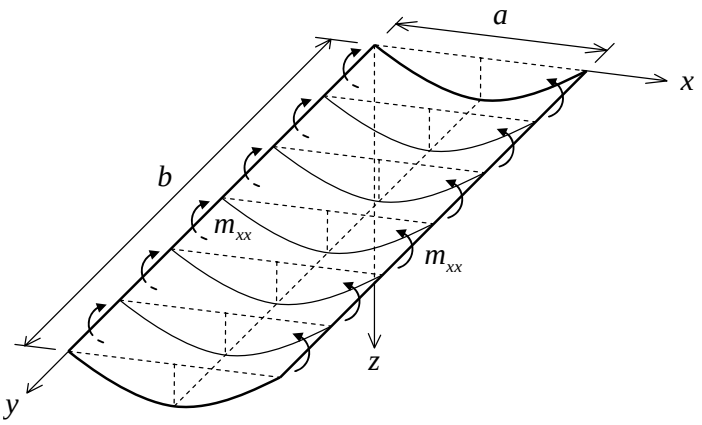

Fig. 5.1: Cylindrical deflection plane.

All lines that run parallel to the supports remain straight.
With formulas (4.3) and (4.4) it follows:

$$m_{xx} = 2\,DC \quad ; \quad m_{yy} = \upsilon\, 2\,DC = \upsilon\, m_{xx} \quad ; \quad m_{xy} = 0$$

Furthermore from formula (4.5) it follows:

$$v_x = v_y = 0$$

In the plate a constant bending moment m_{xx} is present, which is caused by an externally applied moment of the same size along the straight edges $x = 0$ and $x = a$.
In the direction of the straight generating lines a constant moment m_{yy} of the magnitude $\upsilon\, m_{xx}$ is present. For steel, with a value $\upsilon = 0.3$ this will lead to $m_{yy} = 0.3\, m_{xx}$; for concrete with the value $\upsilon = 0.2$ it holds that $m_{yy} = 0.2\, m_{xx}$. Twenty percent of the reinforcement that is necessary in the span direction is also necessary in the perpendicular direction, even when no curvature occurs there.

A cylindrical plane of deflection of arbitrary shape

Now the general form of the deflection is $w = f(x)$. Substitution into the differential equation (4.8) shows that a distributed load causes this plane of deflection:

$$p = D\frac{d^4}{dx^4} f(x)$$

This is the differential equation for the deflection of a beam with bending stiffness D instead of EI. For the moments we find, see (4.7):

$$m_{xx} = -D\frac{d^2}{dx^2} f(x) \quad ; \quad m_{yy} = \upsilon\, m_{xx} \quad ; \quad m_{xy} = 0$$

The fact that a bending moment m_{yy} is generated without warping in the y-direction, is true in every case, in which all the terms are constant in the y-direction.

Omnidirectional bending

A deflection of the form:

$$w = C\, y\,(a - y)$$

represents a cylindrical plane with generating lines parallel to the x-axis and does not deliver new viewpoints. Superposition of the earlier solutions in the x-direction and y-direction however does lead to new aspects. To keep the formulas simple we will consider the superposition of the solutions $w = -C\, x^2$ and $w = -C\, y^2$. With $x^2 + y^2 = r^2$ this leads to:

$$w = -C\left(x^2 + y^2\right) = -C\, r^2$$

This is a paraboloid of revolution (see Fig. 5.2). For the moments it holds:

$$m_{xx} = 2\, DC(1+\upsilon) \quad ; \quad m_{yy} = 2\, DC(1+\upsilon) \quad ; \quad m_{xy} = 0$$

Using the transformation formulas for the moments in random directions (see Fig.5.3) it is found:

$$m_{nn} = m_{xx}\cos^2\alpha + m_{yy}\sin^2\alpha = 2\, DC(1+\upsilon) \quad ; \quad m_{tt} = 2\, DC(1+\upsilon) \quad ; \quad m_{nt} = 0$$

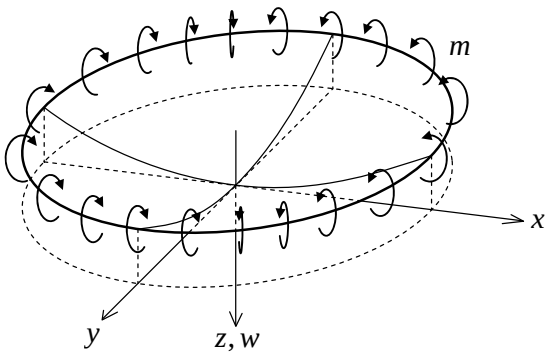

Fig. 5.2: Multidirectional bending.

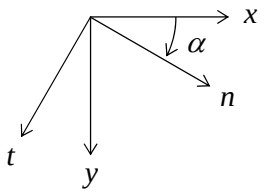

Fig. 5.3: Transformation of axes.

The bending moment is equal in all directions. Torsional moments do not appear. Here we have the case of pure bending due to a constant moment m along the perimeter of a circular plate. The constant C follows from:

$$m = 2\,DC(1+\upsilon) \quad \rightarrow \quad C = \frac{m}{2D(1+\upsilon)}$$

and the formula for the plane of deflection:

$$w = \frac{-m}{2D(1+\upsilon)} r^2$$

5.2 Panel with constant torsion

First, we give a rectangular plate a deflection of the form (see Fig. 5.4):

$$w = -C\,x\,y$$

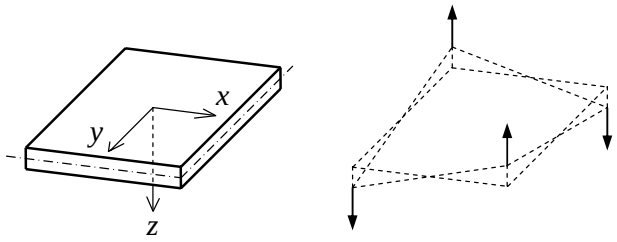

Fig. 5.4: Panel with constant torsion.

This gives a second derivative:

$$\frac{\partial^2 w}{\partial x\,\partial y} = -C$$

The other two derivatives are zero. For the moments this results into:

$$m_{xy} = (1-\upsilon)DC \quad ; \quad m_{xx} = 0 \quad ; \quad m_{yy} = 0$$

The bending moments are both zero, and the torsion is constant in the plate and positive. The derivative of the moments provides the shear forces. The shear forces turn out to be zero:

$$v_x = 0 \quad ; \quad v_y = 0$$

According to (4.6) the second derivative of the moments gives the load. As a result the load p is equal to zero. On the edge $x = \text{constant}$ the following support reaction is obtained, that also shows to be zero:

$$f_w = v_x + \frac{\partial m_{xy}}{\partial y} = 0$$

Naturally, this is also the case for the other edges.
In the plate only a torsional moment is present. Due to the torsional moment in the four corners of the plate a concentrated support reaction of $2m_{xy}$ is generated (see Fig. 5.4). In literature, this case is known as the "plate of Nadai". This stress state may be used to experimentally determine the plate (torsional) stiffness.
The panel with a constant torsional moment and four corner forces will play a role in the lecture notes on approximating computational methods.

5.3 Sinusoidal load on a square plate

A square plate with dimensions a is simply supported along the four edges. The origin of the coordinate system is chosen in one of the corners and the axes coincide with the sides of the square (see Fig. 5.5).

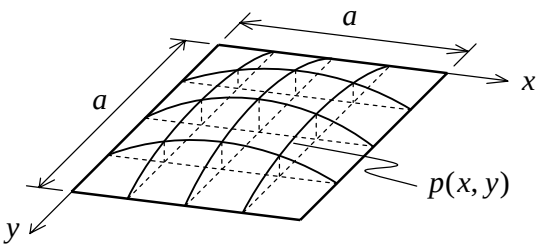

Fig. 5.5: Double-sine load on a simply supported square plate.

A distributed load is considered of the form:

$$p(x, y) = p \sin\frac{\pi x}{a} \sin\frac{\pi y}{a}$$

This load may be considered the first term of a Fourier series of a homogeneously distributed load.

Determination of displacement
It is easy to see that a solution in the form of:

$$w(x, y) = w \sin\frac{\pi x}{a} \sin\frac{\pi y}{a}$$

complies with the differential equation and the boundary conditions of the simple supports as was discussed in section 4.4:

$$x = 0 \quad \text{and} \quad x = a \quad \rightarrow \quad \begin{cases} w = 0 \\ \dfrac{\partial^2 w}{\partial x^2} = 0 \end{cases}$$

$$y = 0 \quad \text{and} \quad y = a \quad \rightarrow \quad \begin{cases} w = 0 \\ \dfrac{\partial^2 w}{\partial y^2} = 0 \end{cases}$$

Substitution of this solution in the differential equation (4.8) delivers:

$$\left[\frac{\pi^4}{a^4} + 2\frac{\pi^4}{a^4} + \frac{\pi^4}{a^4} \right] w = \frac{p}{D} \quad \rightarrow \quad w = \frac{pa^4}{4\pi^4 D}$$

The solution therefore is:

$$w(x, y) = \frac{pa^4}{4\pi^4 D} \sin\frac{\pi x}{a} \sin\frac{\pi y}{a}$$

This is a particular solution that appears to satisfy the boundary conditions of the simply supported plate. Then the particular solution is the complete solution and we do not need a homogenous solution of the differential equation. The plane of deflection is similar in shape to the load distribution.

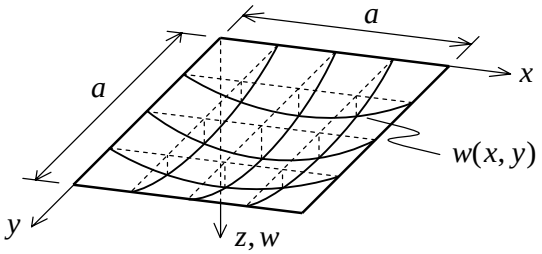

Fig. 5.6: Deflection of the square plate.

This is visualised in Fig. 5.6. For the maximum deflection of a square plate we have found:

$$w_{\max} = \frac{pa^4}{4\pi^4 D}$$

For the maximum deflection of a beam with a unit of width, stiffness D and the same span and subjected to a sinusoidal line load p, we find:

$$w_{\max} = \frac{p\, a^4}{\pi^4 EI}$$

The deflection of the plate is a quarter of the deflection of the beam. A very wide plate that is supported in one direction only, is comparable to a beam and so four times weaker than the square plate.
One might expect a square plate to be twice as stiff as a beam, at a first look, noticing that a plate can transfer loads in two directions, so “beam” action in the x-direction and “beam” action in the y-direction may cooperate. However, the square plate receives additional stiffness by two other “beams”, which act in the diagonal direction. The length of these “beams” is longer, but the ends act as clamped ends in the corners. Because of the straight

edges, both $\partial w/\partial x$ and $\partial w/\partial y$ are zero in the corners. Consequently, the derivative of w must be zero in all directions, which explains the apparent clamped ends of the diagonal "beams".

Determination of moments and shear forces

The formulas in (4.7) lead to:

$$m_{xx} = +\frac{1+\upsilon}{4\pi^2} pa^2 \sin\frac{\pi x}{a}\sin\frac{\pi y}{a}$$

$$m_{yy} = +\frac{1+\upsilon}{4\pi^2} pa^2 \sin\frac{\pi x}{a}\sin\frac{\pi y}{a}$$

$$m_{xy} = -\frac{1-\upsilon}{4\pi^2} pa^2 \cos\frac{\pi x}{a}\cos\frac{\pi y}{a}$$

The distribution of these moments is drawn in Fig. 5.7. The solution for the moments confirms that the boundary conditions are complied with. The bending moments appears to be similar in shape again with the plane of deflection and load distribution, respectively. The

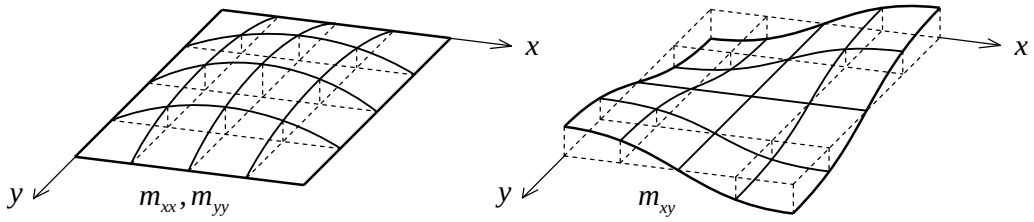

Fig. 5.7: Distribution of moments in a simply supported square plate under double-sine loading.

torsional moments go against that. Where the bending moment is at a maximum, the torsional moment is zero, and where the bending moment is zero the torsional moment is at a maximum.

For the maximum bending moments in the plate we now find:

$$m_{xx,\max} = m_{yy,\max} = \frac{1+\upsilon}{4\pi^2} pa^2$$

For a very wide plate that is supported only in one direction (x-direction) we find:

$$m_{xx,\max} = \frac{1}{\pi^2} pa^2$$

This is also the moment in a beam, with a width 1, under a comparable load.

The maximum moment in the plate is a factor $(1+\upsilon)/4$ smaller than in a beam. So the force action in a square plate is very effective.

The largest torsional moments arise in the four corners. In the corner $x = 0$, $y = 0$ of the plate the torsional moment is:

$$m_{xy,\max} = -\frac{(1-\upsilon)}{4\pi^2} pa^2$$

This moment is of the same order of magnitude as the maximum bending moment in the centre of the plate. In the case of a Poisson's ratio $\upsilon = 0$ it is even equal.
The shear forces can be derived from the moments by applying (4.5):

$$v_x = \frac{1}{2\pi} p\,a \cos\frac{\pi x}{a} \sin\frac{\pi y}{a}$$
$$v_y = \frac{1}{2\pi} p\,a \sin\frac{\pi x}{a} \cos\frac{\pi y}{a}$$

Their distribution over the plate area is depicted in Fig. 5.8.

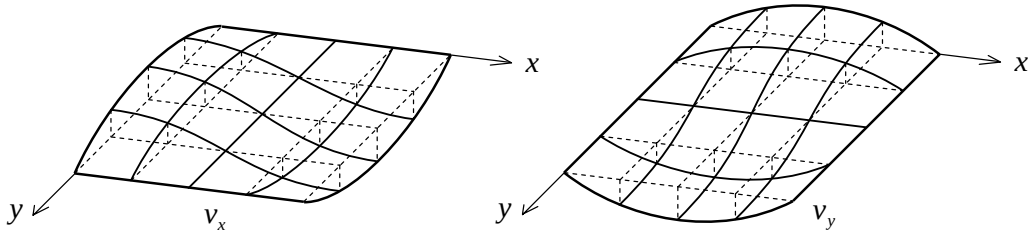

Fig. 5.8: Distribution of shear forces in a simply supported square plate under double-sine loading.

The correctness of the shear forces can be checked as follows. We can compute the total shear force v_x that flows to the edges $x = 0$ and $x = a$. Along edge $x = 0$ the shear force is:

$$v_x = \frac{1}{2\pi} pa \sin\frac{\pi y}{a}$$

and the total shear force *S* along this edge is:

$$S = \frac{1}{2\pi} pa \int_0^a \sin\frac{\pi y}{a} dy = \frac{1}{2\pi} pa \bullet \frac{2}{\pi} = \frac{1}{\pi^2} pa^2$$

For reasons of symmetry the total shear force which flows to the four edges is four times S:

$$4S = \frac{4}{\pi^2} pa^2$$

This total shear force should be equal to the total load P, which is applied to the plate:

$$P = p \int_0^a \sin\frac{\pi x}{a} dx \int_0^a \sin\frac{\pi y}{a} dy = p \frac{2a}{\pi} * \frac{2a}{\pi} = \frac{4}{\pi^2} pa^2$$

Indeed $4S$ equals P correctly.

Determination of support reactions

We continue the analysis of the square plate by computing the distributed support reactions. Along edge $x = 0$ the formula is, see (4.23):

$$f_w = -\left(v_x + \frac{\partial m_{xy}}{\partial y} \right)_{x=0}$$

The earlier found results for v_x and m_{xy} yield:

$$f_w = -\left(\frac{3-\nu}{4\pi}\, pa * \cos\frac{\pi x}{a} \sin\frac{\pi y}{a} \right)_{x=0} = -\frac{3-\nu}{4\pi}\, pa * \sin\frac{\pi y}{a}$$

The support reaction is negative, so its direction will be opposite to the direction of w and the double-sine load (compressive reactions).

The sum of the total support reaction in four edges is:

$$4R = 4\left(-\frac{3-\nu}{4\pi}\, pa \int_0^a \sin\frac{\pi y}{a} dy \right) = -\left(\frac{6-2\nu}{\pi^2} \right) pa^2$$

The absolute value of this is much larger than the total load $4pa^2/\pi^2$. For $\upsilon = 0$ a factor 1.5 exists between load and support reactions.

This difference is fully explained by the existence of concentrated reactions in the four plate corners. In the left-upper corner $(x = 0,\ y = 0)$ the value of the torsional moment is:

$$m_{xy} = -\frac{1-\upsilon}{4\pi^2}\, pa^2$$

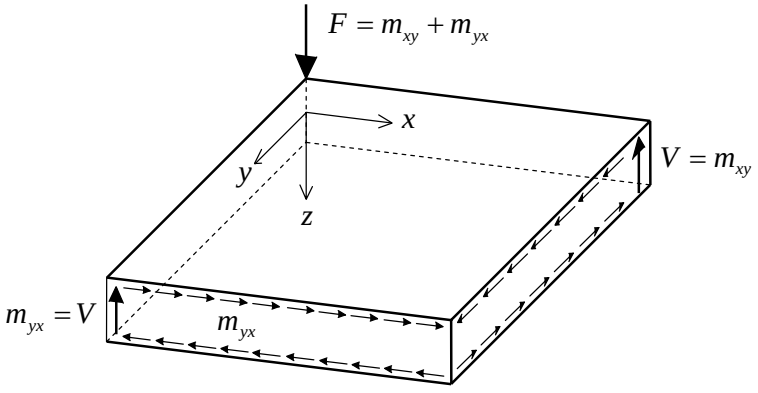

Fig. 5.9: Direction of shear stresses for negative m_{xy} in left-upper corner of rectangular plate under double-sine loading.

This is a negative value, so the direction of the shear stresses in sections perpendicular to the edges is as shown in Fig. 5.9. As a consequence, the two concentrated edge shear forces V are directed upward. For a vertical equilibrium a downward lumped corner reaction F is needed:

$$F = m_{xy} + m_{yx} = 2\left|-\frac{1-\upsilon}{4\pi^2}\,pa^2\cos\frac{\pi x}{a}\cos\frac{\pi y}{a}\right|_{\substack{x=0\\y=0}} = \frac{1-\upsilon}{2\pi^2}\,pa^2$$

Apparently a local downward force is needed to keep the square plate on the simple support. If the plate is not fixed to the support, it will lift up in the corner. To fix the corner, a tensile reaction force is needed. The same force occurs in all corners. Now we should compare $4R + 4F$ with the applied load:

$$4R + 4F = -\frac{6-2\upsilon}{\pi^2}\,pa^2 + \frac{2-2\upsilon}{\pi^2}\,pa^2 = \frac{-4}{\pi^2}\,pa^2$$

Now the total load P is found again. The sign has become negative because the sign convention for support reactions holds.

It is interesting to examine how the rain shower analogy must be interpreted in this case. Fig. 5.10 is a picture of the trajectories. The diagonals and the horizontal and vertical lines through the middle of the plate are trajectories for reasons of symmetry. Trajectories in between

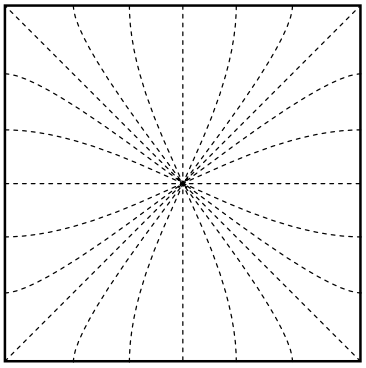

Fig. 5.10: Trajectories for shear forces and load transfer in a square plate (rain-shower analogy).

(dotted lines) end perpendicular to the edges. We can consider the edges as gutters that are open tubes over their full length in order to let through the rain immediately that flows from the "roof". At the same time a local source is bringing up water in each corner. This water flows through the tube and also disappears through the openings. The water that falls down through the openings is more than the water that falls upon the roof in a rain shower.

If the plate were supported along its perimeter by stiff beams that in turn were supported by columns in the corners, these beams would be subjected to higher loads than might be expected at first and this needs to be kept in mind when dimensioning these beams.

A known example of the tilting of a corner of the plate may occur at lock gates produced as double mitre gates. The supports of the mitre gate along the mitre sill and along the mitre post against the other door are simple supports, which cannot produce any tensile reaction forces. The corollary is the plate tilting in the corner between the mitre post and the mitre sill, which creates a gap between the doors and causes the doors to leak.

5.4 Plate simply-supported at two opposite edges with a sinusoidal line load on one free edge

Now, we will consider a bridge slab with span a and width b. The bridge is simply supported at $x = \pm\frac{1}{2}a$ and has free edges at $y = \pm\frac{1}{2}b$. A sine-shaped load is applied on the

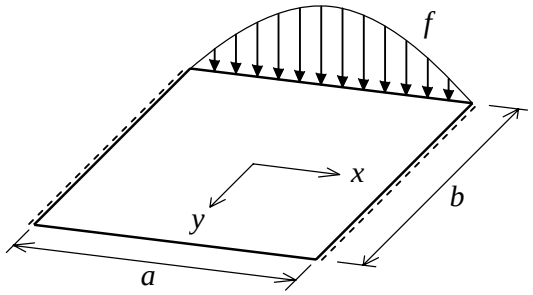

Fig. 5.11: Plate with load on edge.

free edge (as an approximation of a homogenously distributed line load). In this case, a distributed load p is not taken into account. The distributed edge load in this case (see Fig. 5.11) is:

$$\alpha = \frac{\pi}{a} \quad ; \quad f_w{}^0(x) = f^0 \cos\alpha x$$

The boundary conditions require:

$$x = \pm\frac{1}{2}a \quad \rightarrow \quad \begin{cases} w = 0 \\ m_{xx} = 0 \end{cases}$$

$$y = -\frac{1}{2}b \quad \rightarrow \quad \begin{cases} m_{yy} = 0 \\ -\left(v_x + \dfrac{\partial m_{xy}}{\partial y} \right) = f^0 \end{cases}$$

$$y = +\frac{1}{2}b \quad \rightarrow \quad \begin{cases} m_{yy} = 0 \\ v_x + \dfrac{\partial m_{xy}}{\partial y} = 0 \end{cases}$$

Applying the method of separation of variables $w(x, y)$ can be described as a product of two functions $w(x, y) = g(y)\cos\alpha x$. This function directly satisfies the boundary conditions for $x = \pm\frac{1}{2}a$. The function $g(y)$ is the distribution of the deflection w along the line $x = 0$ halfway the span.
Substitution into the biharmonic equation (4.8a) delivers an ordinary differential equation for g of the fourth order.

$$D\left(\alpha^4 g - 2\alpha^2 \frac{d^2 g}{dy^2} + \frac{d^4 g}{dy^4} \right) = 0$$

In section 2.2.2 we have already determined the solution of this homogenous equation. It follows that w equals:

$$w(x,y) = \left(C_1 e^{\alpha y} + C_2 \alpha y e^{\alpha y} + C_3 e^{-\alpha y} + C_4 \alpha y e^{-\alpha y}\right) \cos \alpha x$$

The four constants follow from the four boundary conditions in the edges $y = -\frac{1}{2}b$ and $y = +\frac{1}{2}b$. Without further elaboration, we will outline the solution for w on the line $x = 0$ (see Fig. 5.12) for three special cases.

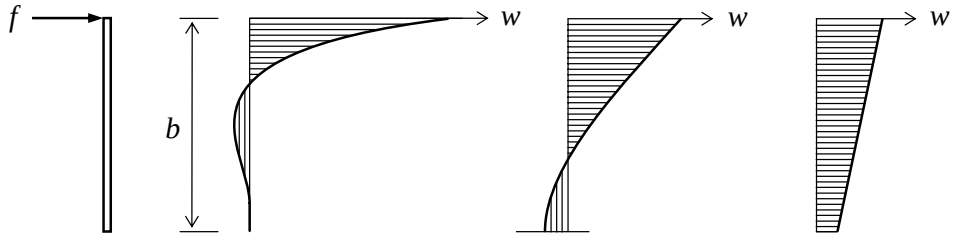

case 1	case 2	case 3
$\frac{b}{a} \gg 1$	$\frac{b}{a} = 1$	$\frac{b}{a} \ll 1$

Fig. 5.12: Deflection curve for x = 0.

Case 1
The plate is supposed infinitely long in the y-direction. Then C_1 and C_2 must be zero, for fading away to take place (a very wide viaduct).

Case 2
This is a normal plate, as could appear in a viaduct. All four constants now are involved, and consequently all the terms $e^{\alpha y}$, $\alpha y e^{\alpha y}$, $e^{-\alpha y}$ and $\alpha y e^{-\alpha y}$ are important.

Case 3
The plate (viaduct) is so narrow that it turns into a strip-shaped beam. In section 2.2.2 is indicated that the solution turns into another form (Taylor expansion).

$$w(x,y) = \left\{\bar{C}_1 + \bar{C}_2 \alpha y + \bar{C}_3 (\alpha y)^2 + \bar{C}_4 (\alpha y)^3 + \ldots\right\} \cos \alpha x$$

We shall limit ourselves to the case that $\upsilon = 0$. The moment m_{yy} then is linear in y (curvature is the second derivative). Because it has to be zero on both edges, m_{yy} is zero everywhere. This means $\bar{C}_3$ and $\bar{C}_4$ are zero.
So, the deflection becomes linear in y, and the two constants $\bar{C}_1$ and $\bar{C}_2$ follow from the magnitude of the edge load f_w^0, respectively zero on both sides. This solution will also follow from the beam theory. Then, the beam is subjected to bending by a line load f_w^0 and by a distributed torsional moment $\frac{1}{2}b\ f_w^0$. The first causing the constant deflection $\bar{C}_1$ and the second the rotated part $\bar{C}_2 \alpha y$.

Participating width
For the convenience of structural designers the concept of "participating width" can be introduced, because they normally prefer to do a beam analysis. Suppose that Fig. 5.13 is the distribution of the bending moment m_{xx} over the width b and the maximum value at the edge

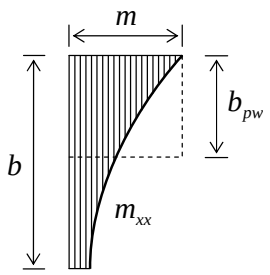

Fig. 5.13: Definition of the participating width b_{pw}; the rectangular block mb_{pw} has the same area as the hatched area.

is m. If the sine-shaped load was applied to a beam with the same span a and a rectangular cross-section with the same depth as the plate, the maximum moment at mid-span would be:

$$M = \frac{f^0 a^2}{\pi^2}$$

The ratio of M and m is the participating width b_{pw} of the plate. If the engineers can make a good guess for this width, it suffices to do a beam analysis and to spread the total moment over the participating width in order to calculate the occurring edge moment m.

5.5 Handling the stress results

To evaluate if the material can resist the calculated moments and shear forces, we may proceed as below. In a steel plate, from the plate moments the stresses can be calculated and then the ideal stress $\bar{\sigma}$ can be obtained, as was done for plane stress problems in section 2.5:

$$\bar{\sigma} = \sqrt{\sigma_{xx}^2 + \sigma_{yy}^2 - \sigma_{xx}\sigma_{yy} + 3\sigma_{xy}^2} \qquad (steel)$$

For a concrete slab reinforcement is necessary on the bottom side of the plate (the positive z-direction) when the moments m_{xx} and m_{yy} are positive. For finding the reinforcement moments $\bar{m}_{xx}$ and $\bar{m}_{yy}$, these moments are augmented with the absolute value of the torsional moment m_{xy}. When the moments m_{xx} and/or m_{yy} are negative, the top side of the slab requires reinforcement. In this case the absolute value of the torsional moment is subtracted. In general, we investigate the following possibilities:

$$\left.\begin{aligned} \bar{m}_{xx} &= m_{xx} - |m_{xy}| < 0 \\ \bar{m}_{yy} &= m_{yy} - |m_{xy}| < 0 \end{aligned}\right\} \text{ top reinforcement}$$

$$\left.\begin{aligned} \bar{m}_{xx} &= m_{xx} + |m_{xy}| > 0 \\ \bar{m}_{yy} &= m_{yy} + |m_{xy}| > 0 \end{aligned}\right\} \text{ bottom reinforcement} \qquad (concrete)$$

According to this rule both bottom and top reinforcement may be needed for positive moments m_{xx} or m_{yy}, and significantly large torsional moments. Similarly both bottom and top reinforcements may be needed for negative moments m_{xx} or m_{yy}, and significantly large torsional moments.

References

Girkmann, K., *Flächentragwerke, Einführung in die Elastostatik der Scheiben, Platten, Schalen und Faltwerke,* Wien, Springer, 1974.

Mindlin R.D. *Influence of rotary inertia and shear on flexural motions isotropic, elastic plates*. Trans ASME, J. Applied Mechanics 1951; 18: 1031-6

Reissner, E. *The effect of shear deformation on the bending of elastic plates*. Trans ASME, J. Applied Mechanics 1945; 12: A68-77

Reissner, E. *On bending of elastic plates,* Quart. Applied Mechanics 1947; 5: 55-68

Timoshenko, S.P., *Theory of plates and shells,* Auckland, McGraw-Hill, 1989.

Wang C.M., Lim G.T., Reddy J.N., Lee K.H., *Relationships between bending solutions of Reissner and Mindlin theories*. Engineering Structures 23 (2001) 838-849.