Plate analysis, theory and applications

Lesson: Introduction

CIE4180
November 2021
Max A.N. Hendriks

The majority of the slides have been prepared by Xueyan Liu, Cor Kasbergen & Alexander Schmetz

TU Delft
Delft University of Technology

Outline of the course

Plate theory:

- Plates loaded in their planes
- Plates loaded perpendicularly to their planes
  - Thick plates
  - Thin plates

Numerical methods for plates:

- Discrete element method
- Finite element method (FEM)
- Application of FEM

Outline of the course

Schedule (see Brightspace for details & updates):

- Plates loaded in their plane
  - 2 weeks plate theory and applications of theory
  - 1 week numerical methods
  - Assignment 1
- Plates loaded perpendicularly to their plane
  - 2 weeks plate theory and applications of theory
  - 1 week numerical methods
  - Assignment 2
- After the Christmas break:
  - No lectures in week 7, except:
  - Recap lecture on 7 Jan 2022 ? (at request)
  - Written exam on 27 Jan 2022

Outline of the course

Lectures on Monday, Wednesday and Friday:

- Generally, there will be two lectures per week.

- Occasionally, extra lectures will be planned
  - if needed, or
  - as an occasion to discuss the assignments (Q&A).

  See the schedule on Brightspace.

Lecturers:

- Max Hendriks
- Pierre Hoogenboom

Help with assignments:

Hoessein Alkisaei

Anjali Mehrotra

Outline of the course

Study material (see Brightspace):

- Reader (2 Volumes) by Johan Blaauwendraad
- Book "Plates and FEM" by Johan Blaauwendraad

Assignments:

- Two individual assignments including FEM exercises

Final grade is a weighted average:

- Assignment 1 (10%)
- Assignment 2 (10%)
- Written exam (80%)

Outline of the course

Retakes:

- Assignments: no possibilities for a retake
- The results of assignments are valid only in combination with written exams of the same academic year.

- Written exam: a retake in April

Learning objectives

By the end of the course you should be able to:

- *Understand* the classical theory of plates and its applications
  - In plane
  - Out of plane (thin plates, thick plates)

- *Apply the FEM for plates*
  - Based on thorough understanding of plates theory,
  - limited FEM theory and
  - hands-on experience

What is plate?

Plates are defined as plane structural elements with a small thickness compared to the planar dimensions. The typical thickness to width ratio of a plate structure is less than 0.1. A plate theory takes advantage of this disparity in length scale to reduce the full three-dimensional solid mechanics problem to a two-dimensional problem. The aim of plate theory is to calculate the deformation and stresses in a plate subjected to loads.

General

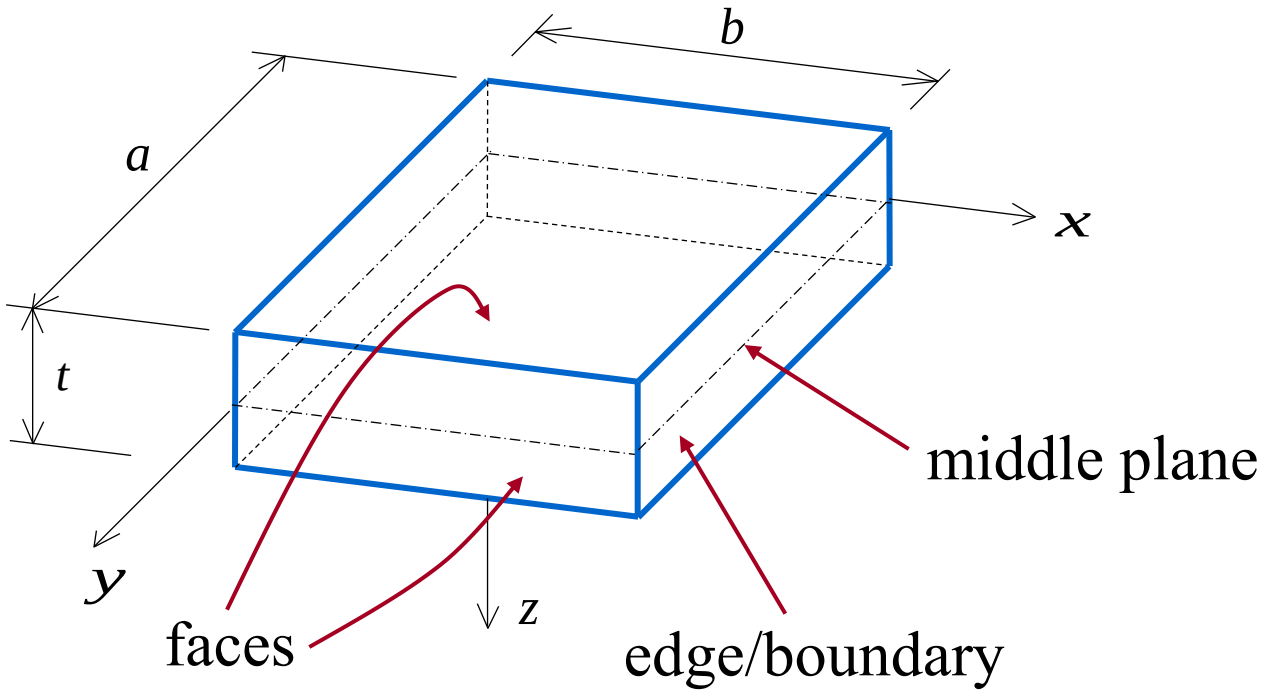

t: the thickness of the plate

a, b: characteristic dimensions (length, width, diameter, etc)

Load on plates

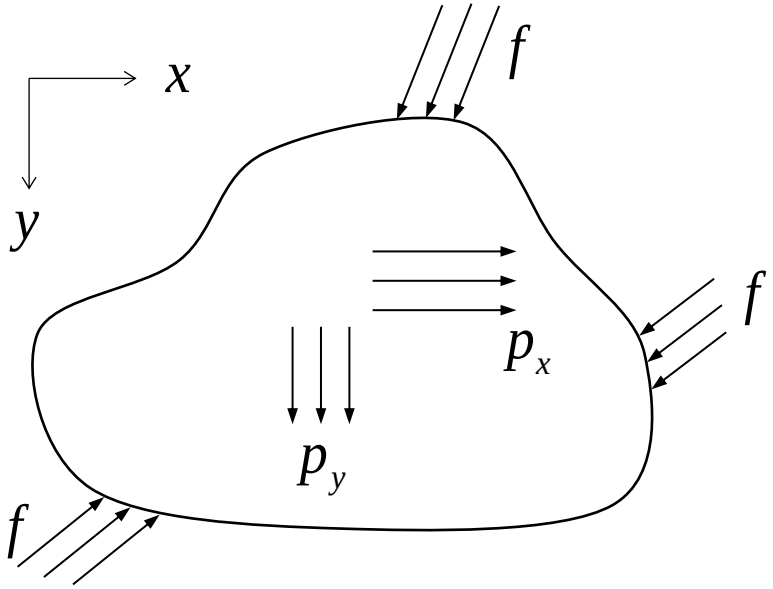

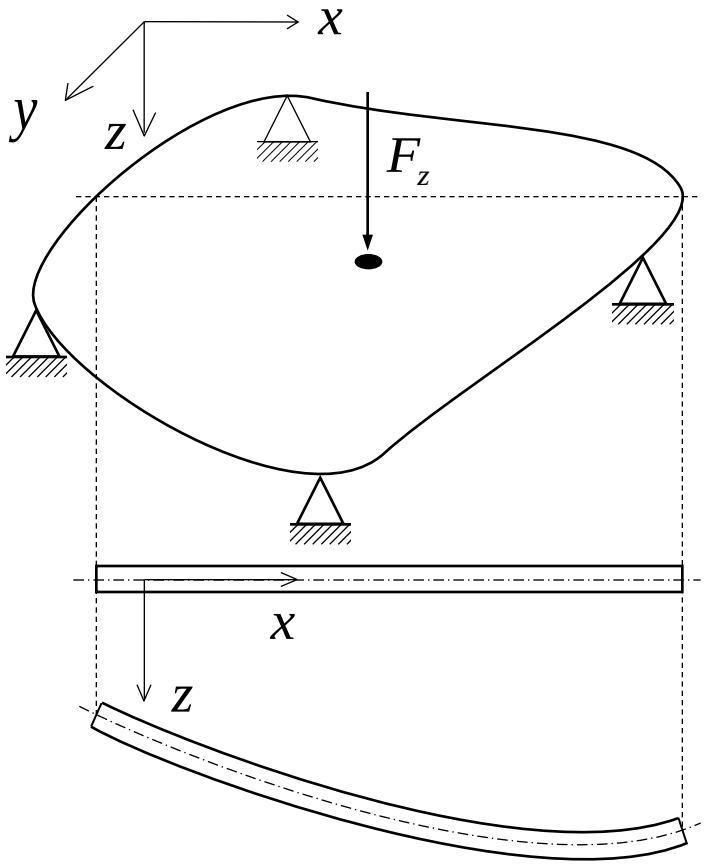

"Thin plate" loaded in-plane

"Plate" with transverse force

Plates clarification

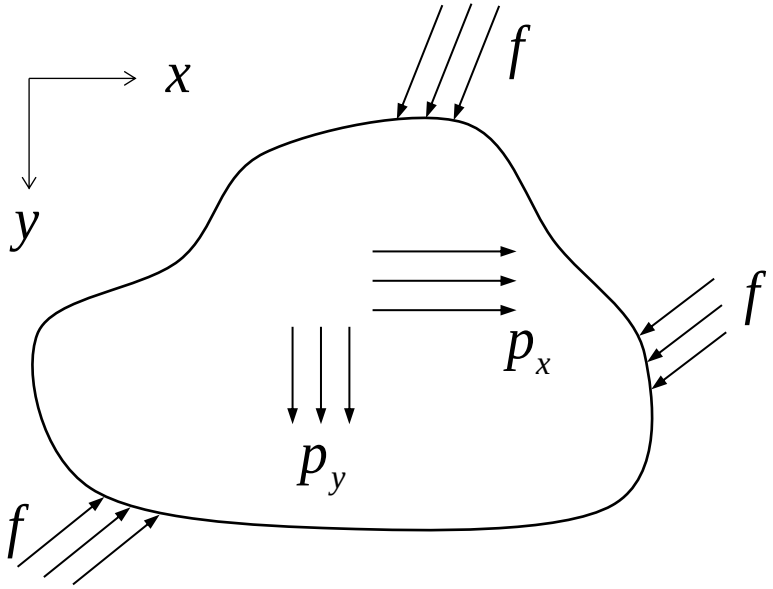

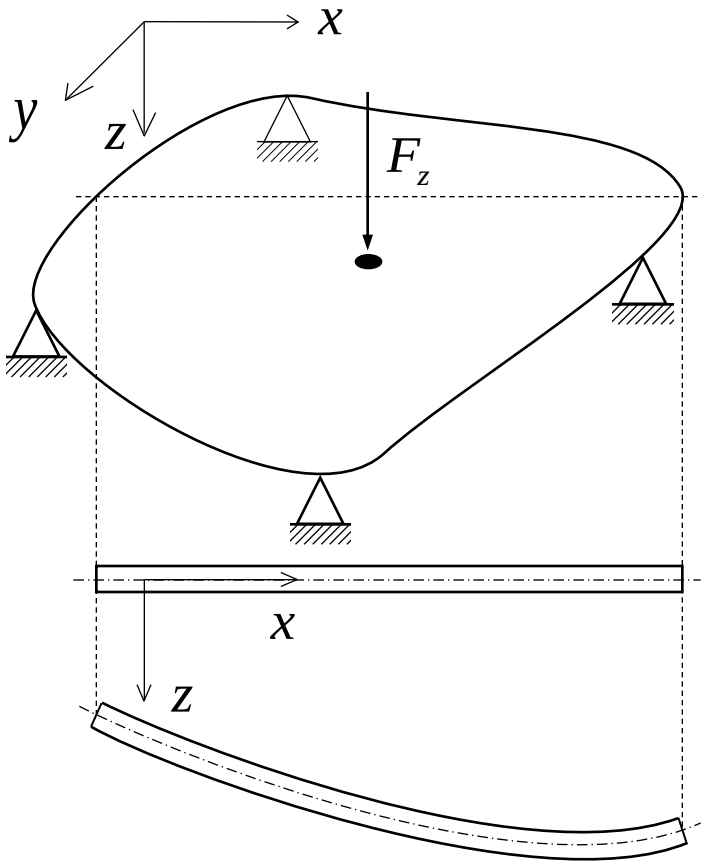

"Thin plate" loaded in-plane

"Plate"

"Plate" with transverse force

"Slab"

Deformation of plates

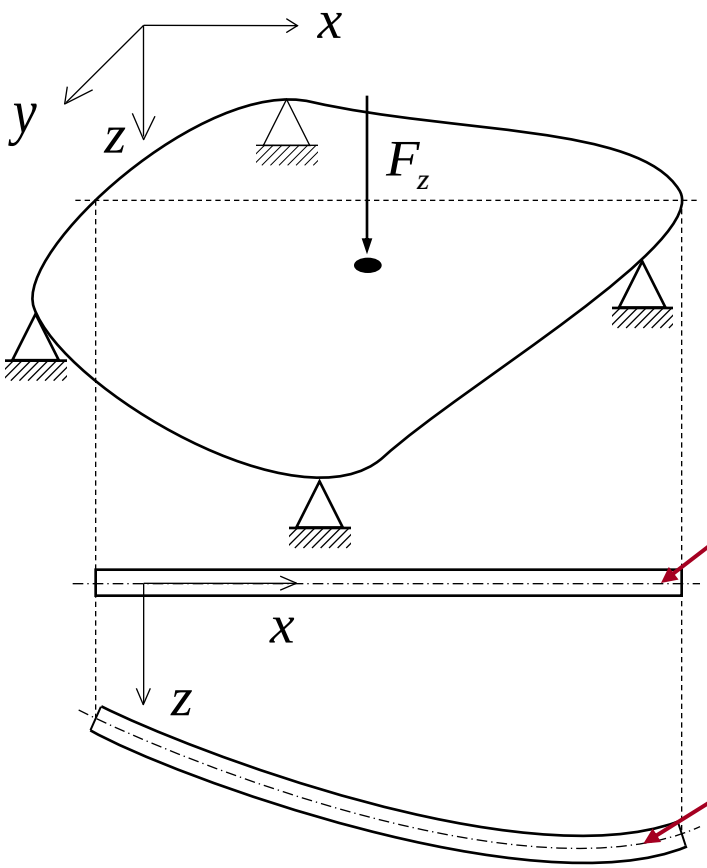

middle plane before deformation

middle plane after deformation

Plate equilibrium

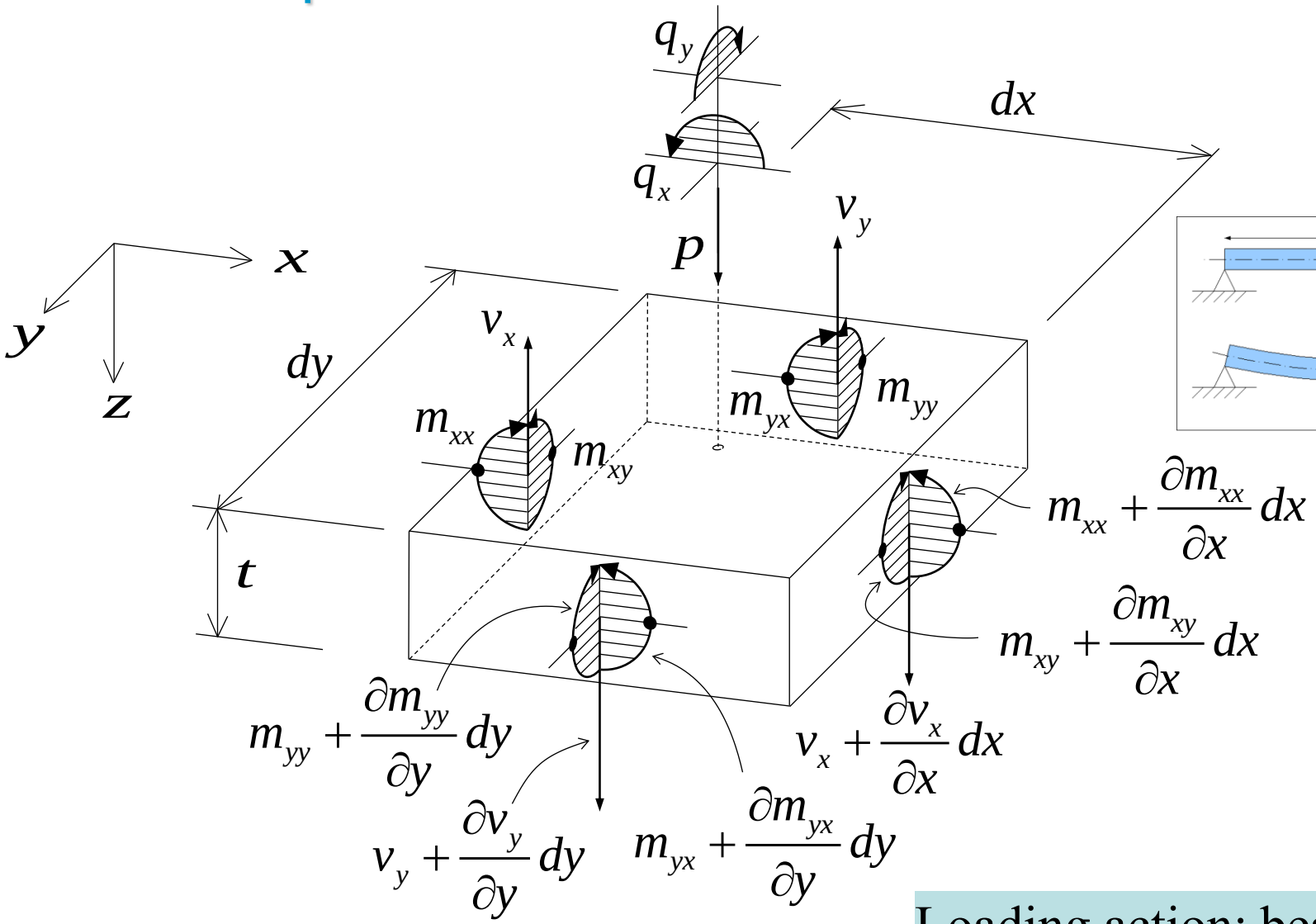

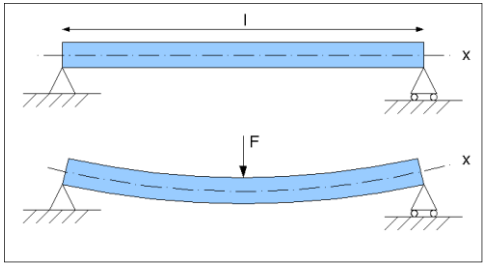

Loading action: beam or cable

Plate equilibrium

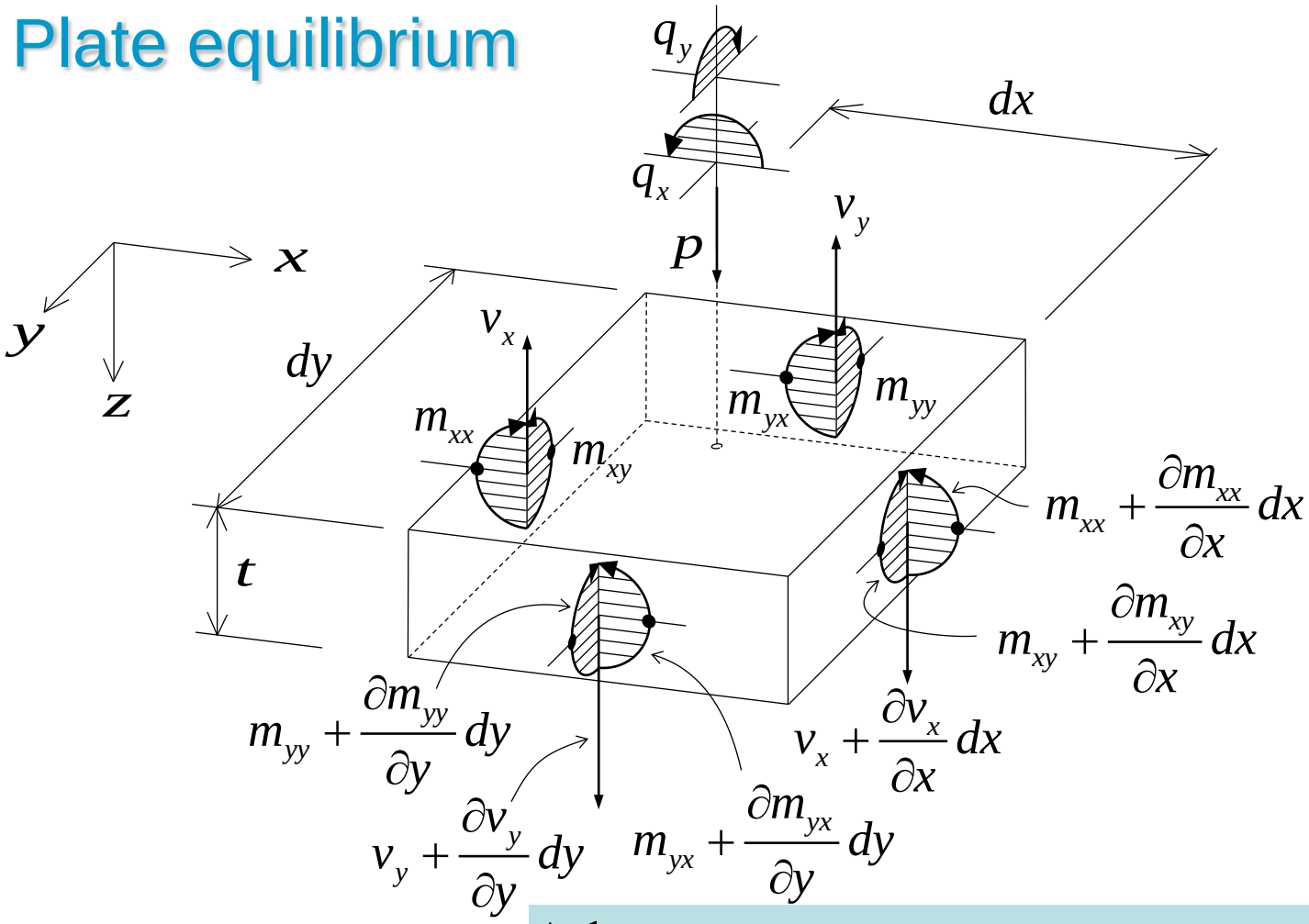

Advantages:

- higher twisting rigidity results significant stiffer;
- lighter structures with high load carrying capacity;
- economy and technological effectiveness;





Seismic analysis: monolithic box behavior or individual masonry components?

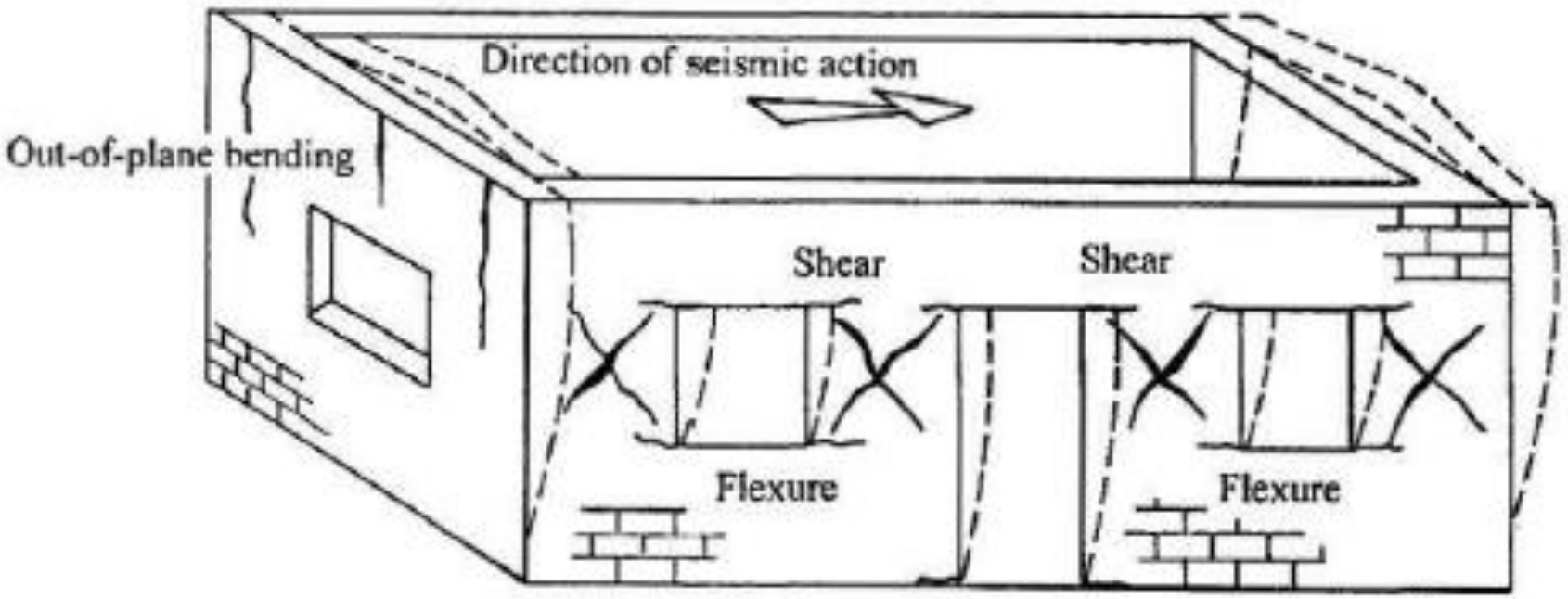

TU Delft

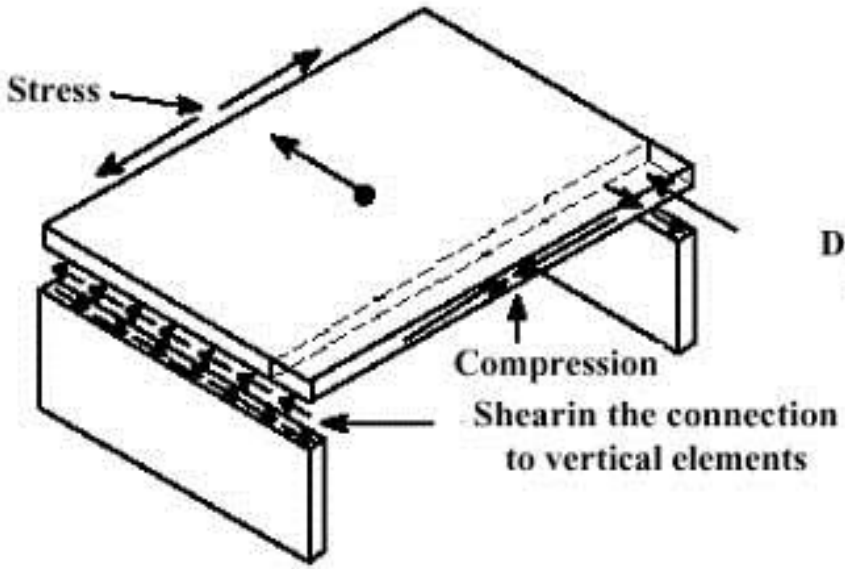

Concentration of stress in rigid diaphragm

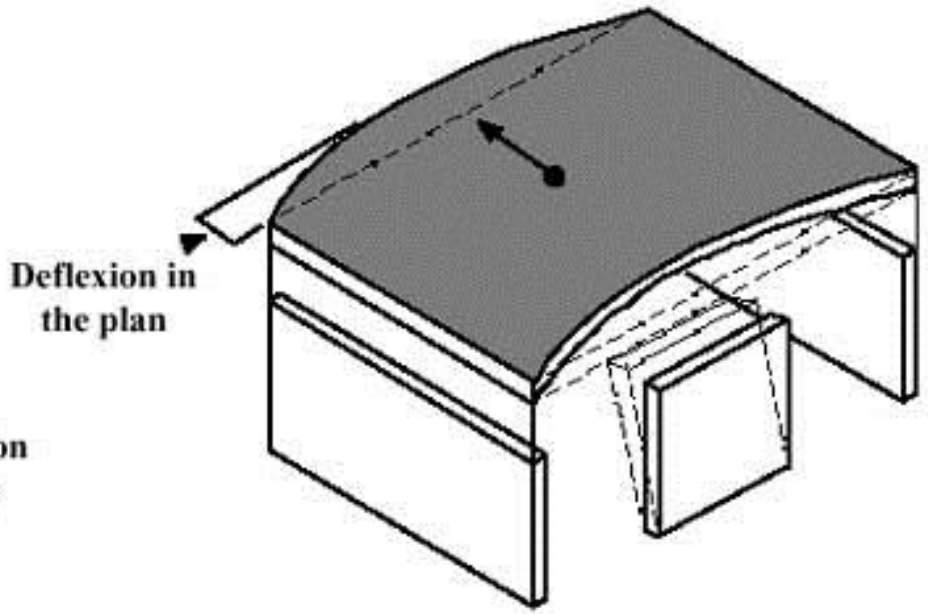

Deflection of stress in flexible diaphragm

Experimental campaign at TU Delft: Masonry walls



Walls

IN-PLANE TESTS

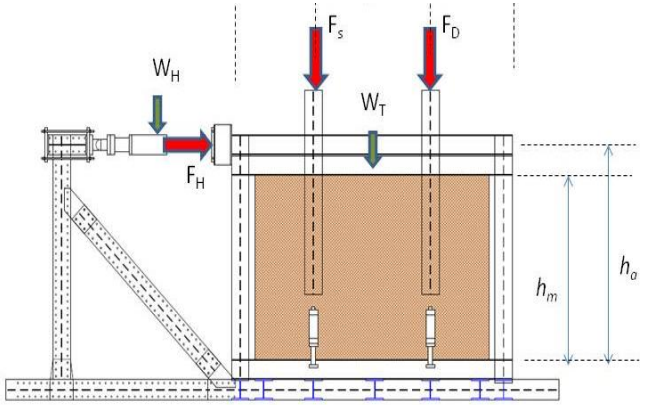

OUT-OF-PLANE TESTS

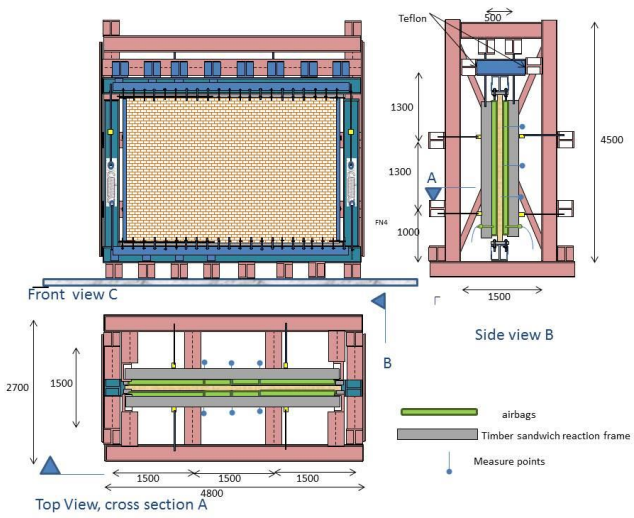

Experimental campaign at TU Delft: In-plane tests

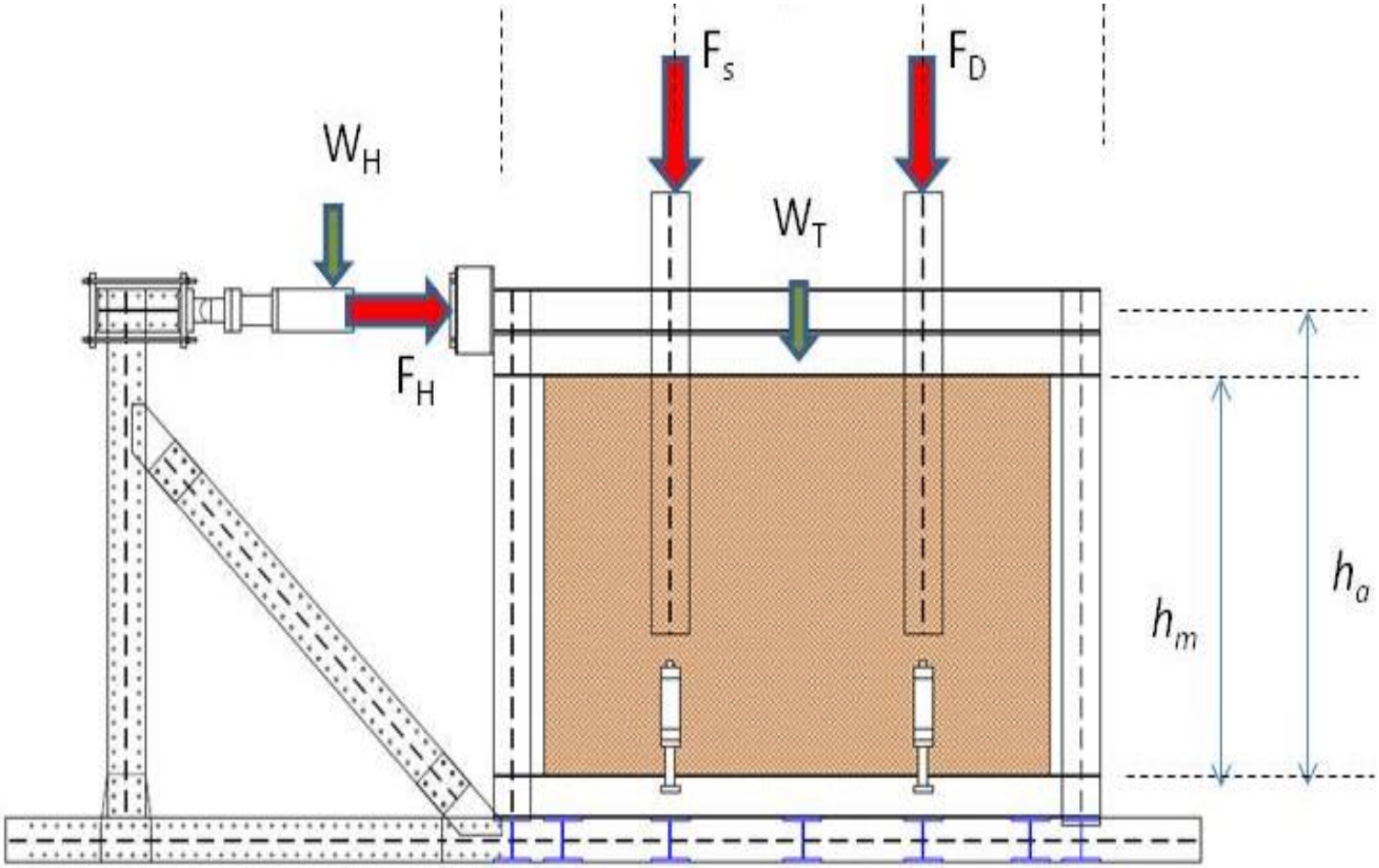

TU Delft

Experimental campaign at TU Delft:

In-plane tests

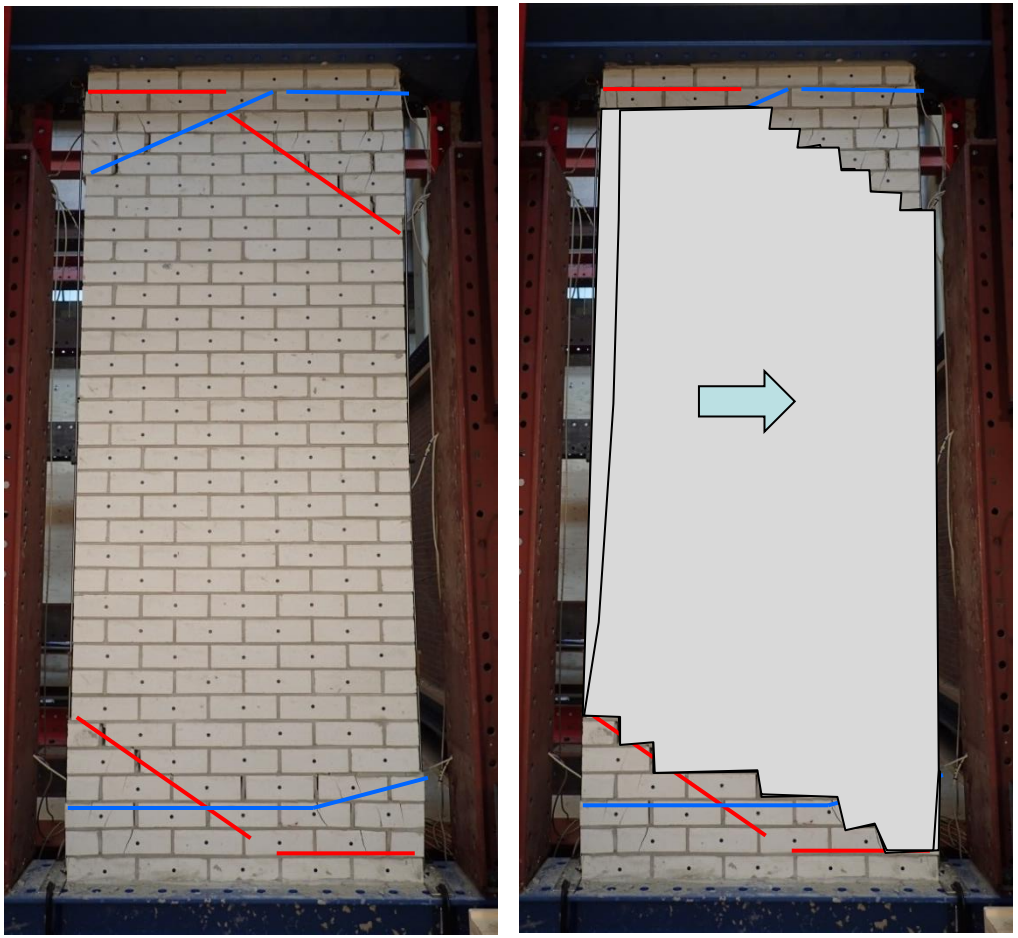

Out-of-plane tests



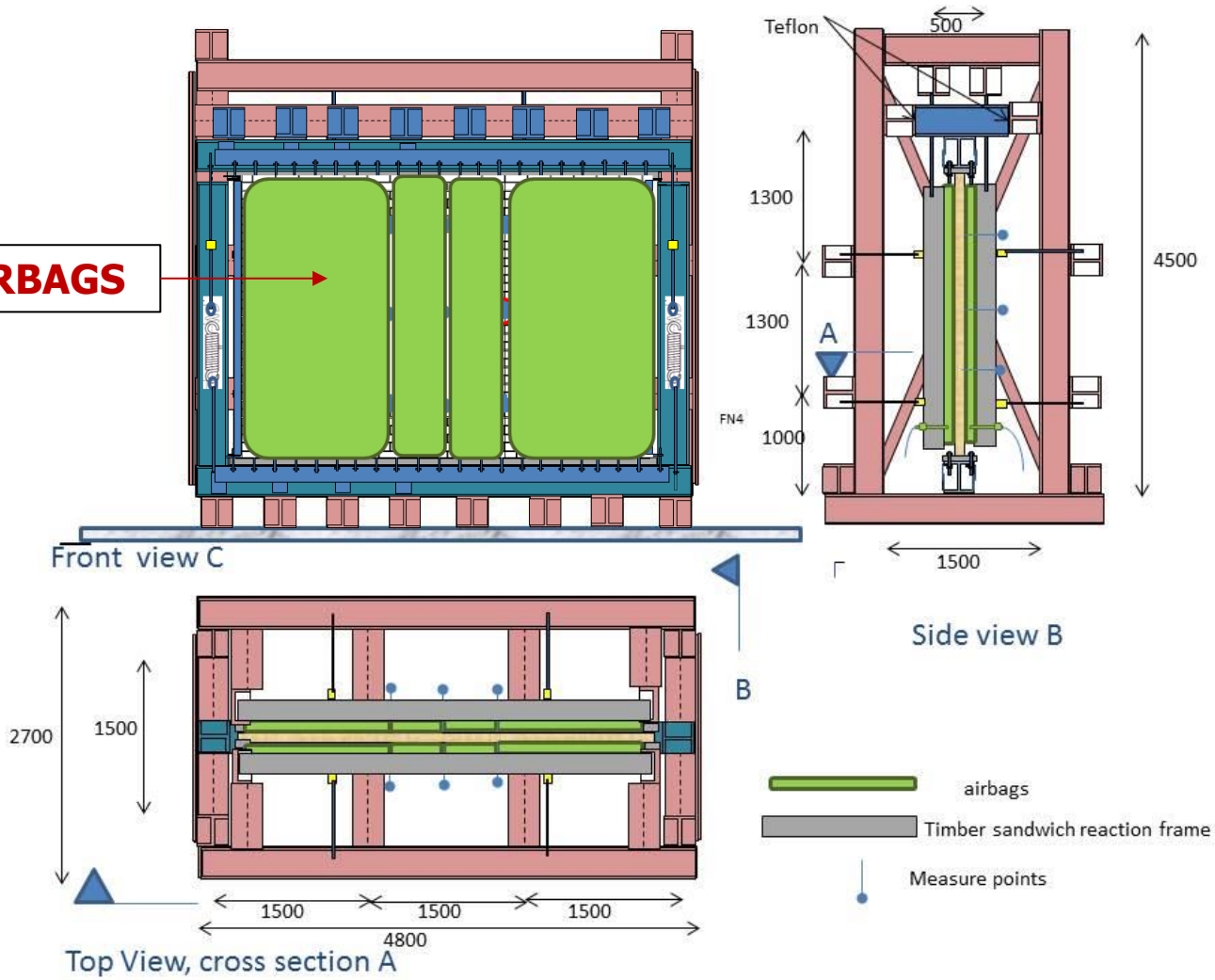

TU Delft

Out-of-plane test: two way bending

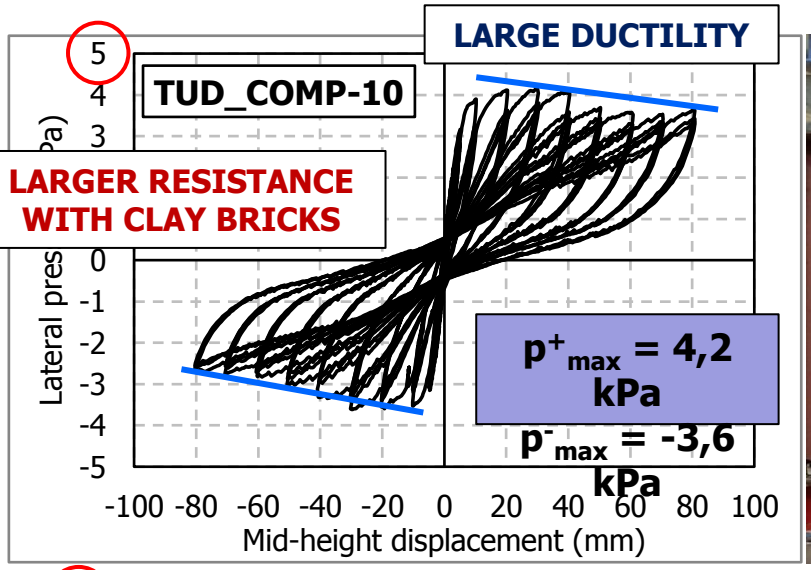

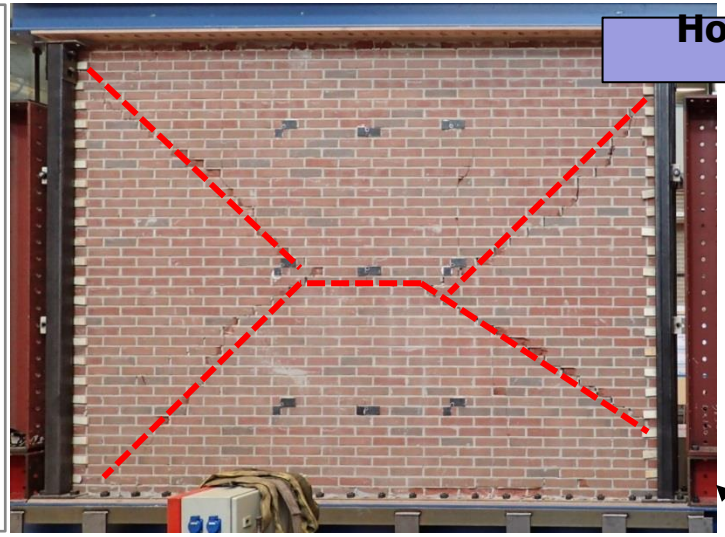

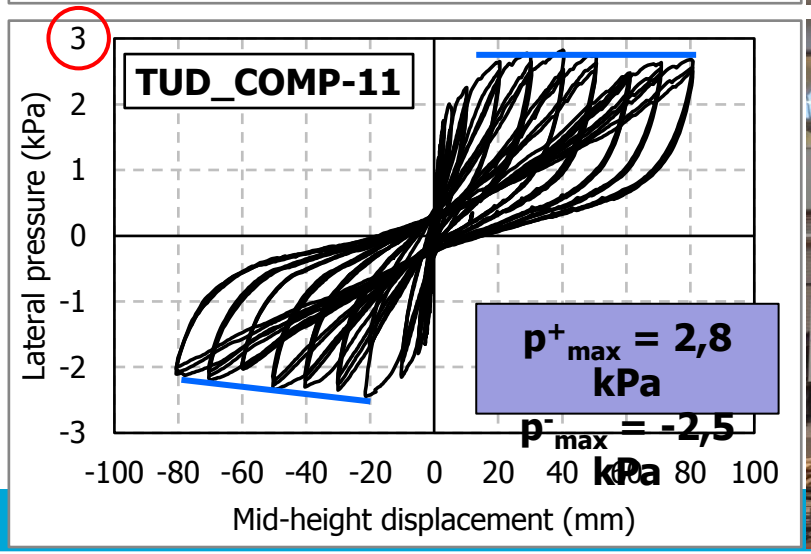

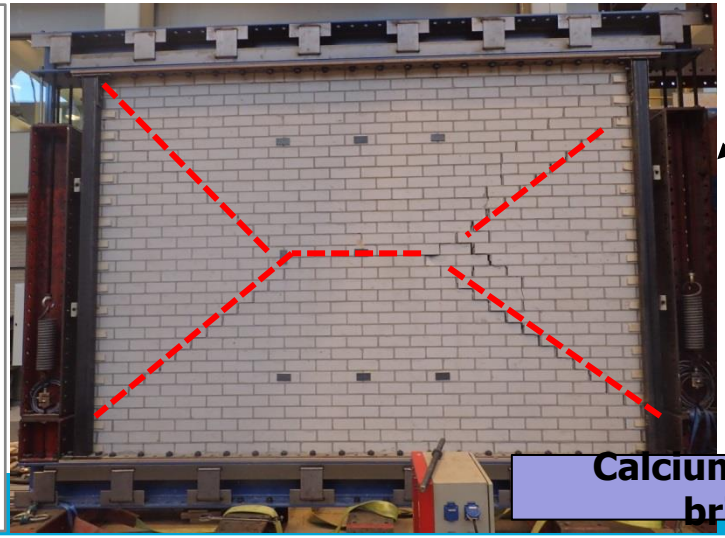

SIMILAR CRACK PATTERN

TU Delft

Why Learn Plate FEM

- Beam, plate and shell FE are available in almost all finite element software packages
  - The intelligent use of this software and correct interpretation of output requires basic understanding of the underlying theories
- FEM is able to solve problems on geometrically complicated domains
  - Analytic methods introduced in the first part of the module are only suitable for computing plates and shells with regular geometries, like rectangular, cylinders, spheres etc.
  - Many shell structures consist of free form surfaces and/or have a complex topology. Computational methods are the only tool for designing such structures.
- FEM is very cost effective and fast compared to experimentation

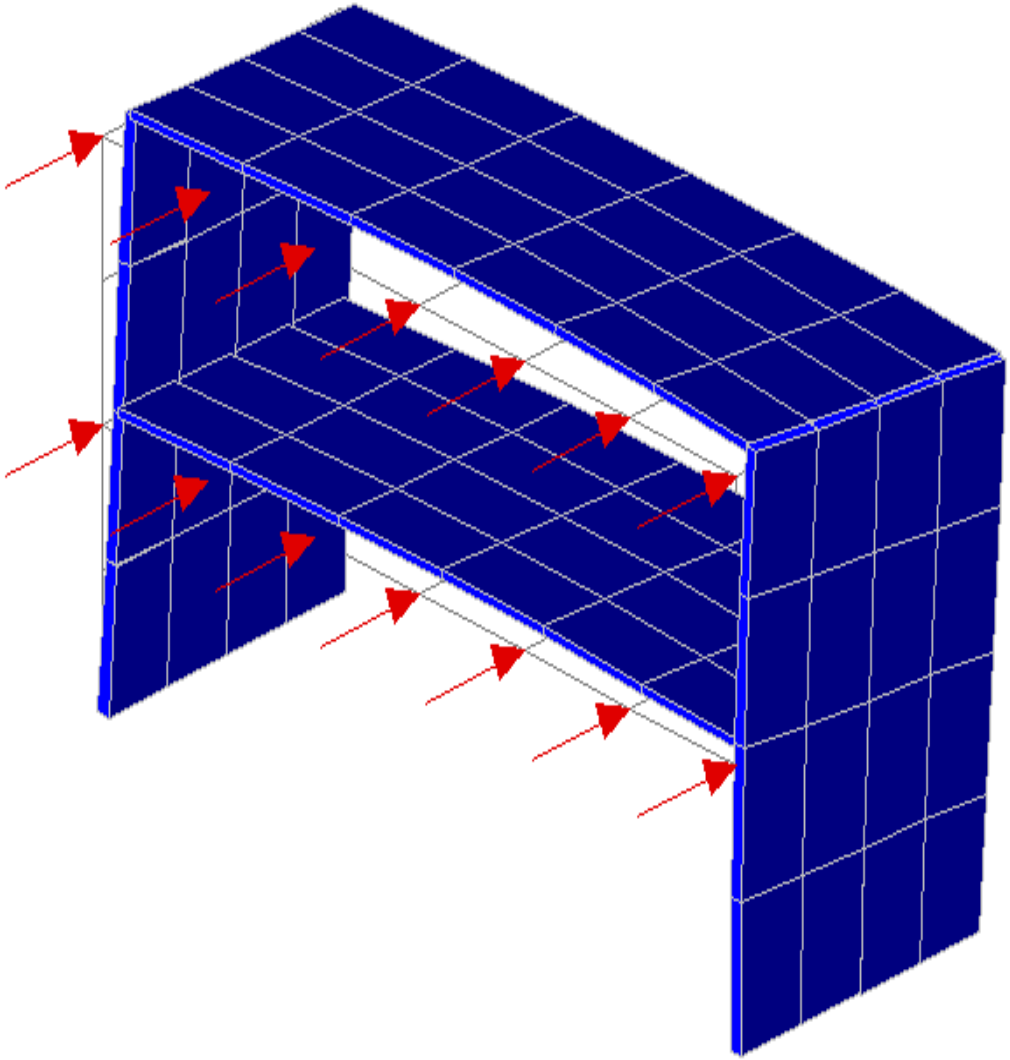

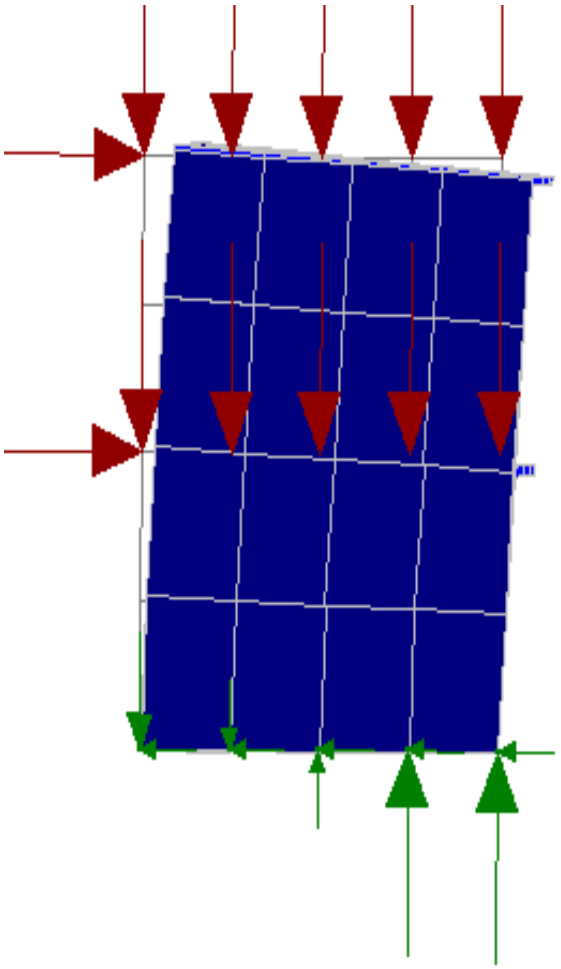

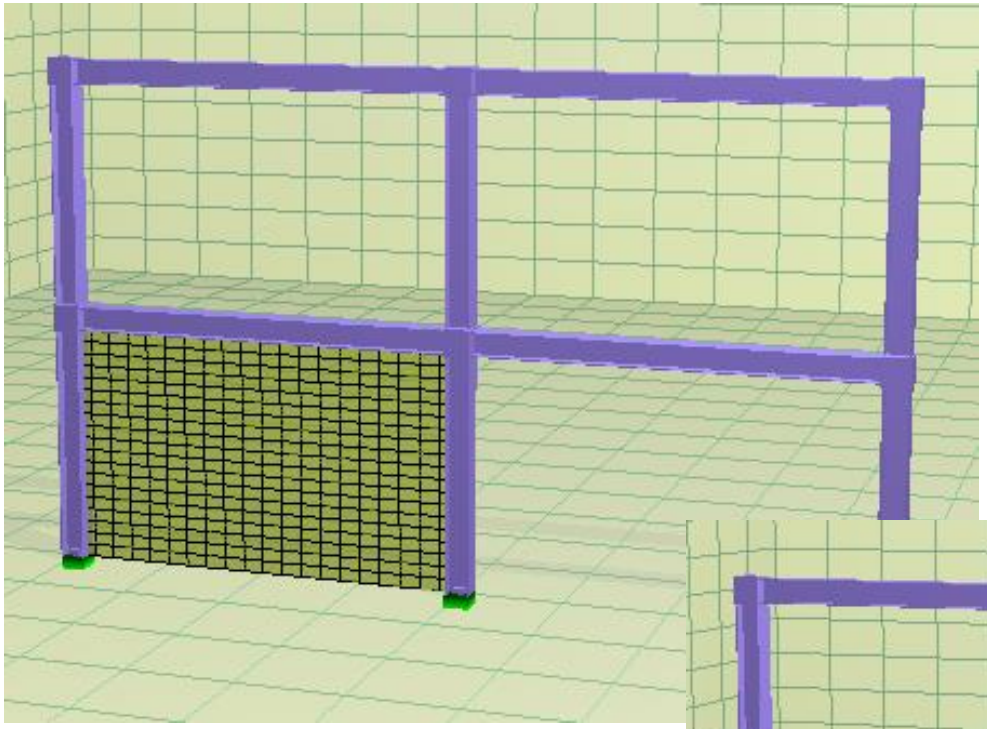

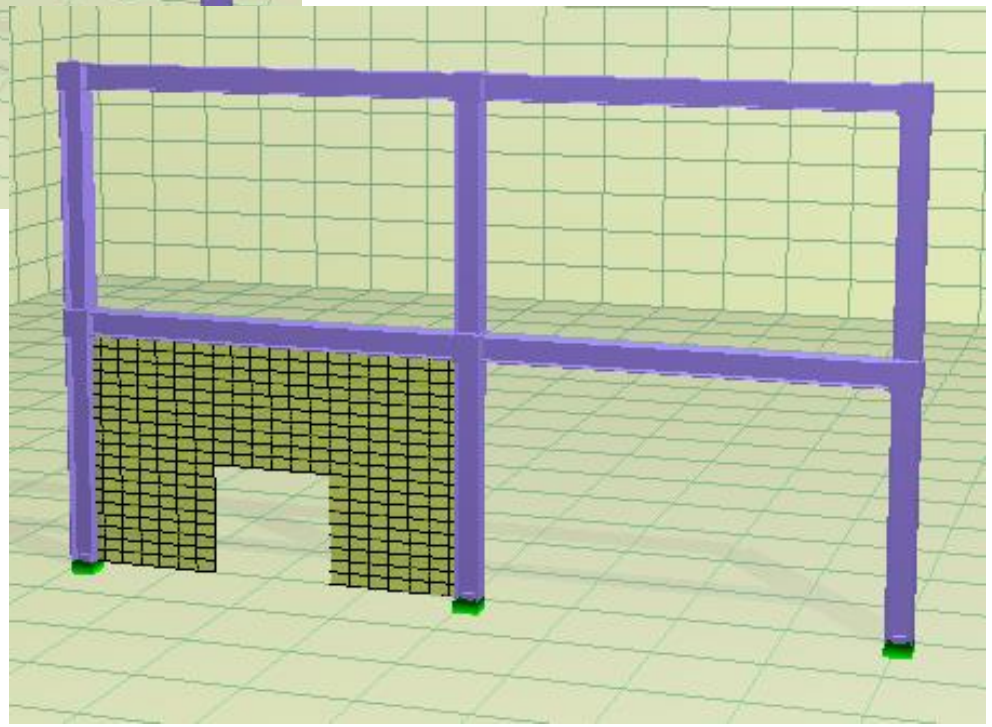

Plates examples

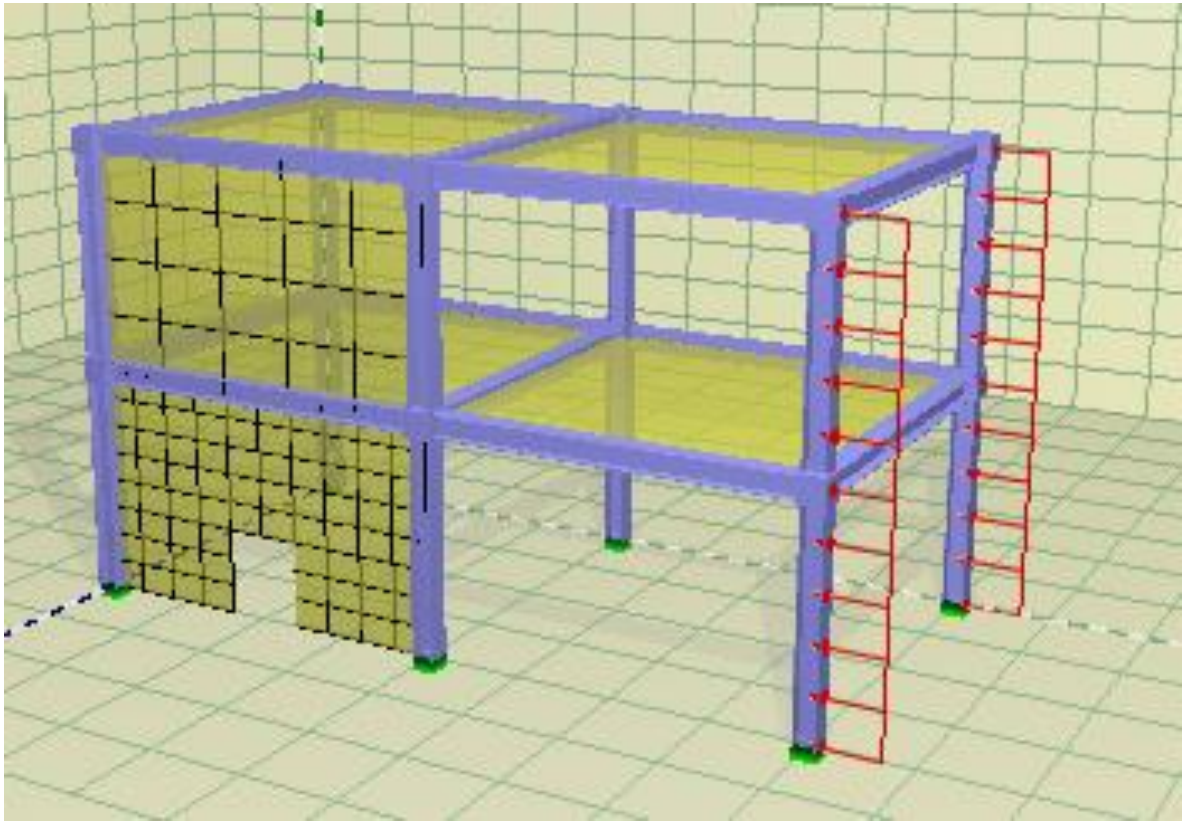

Plates examples

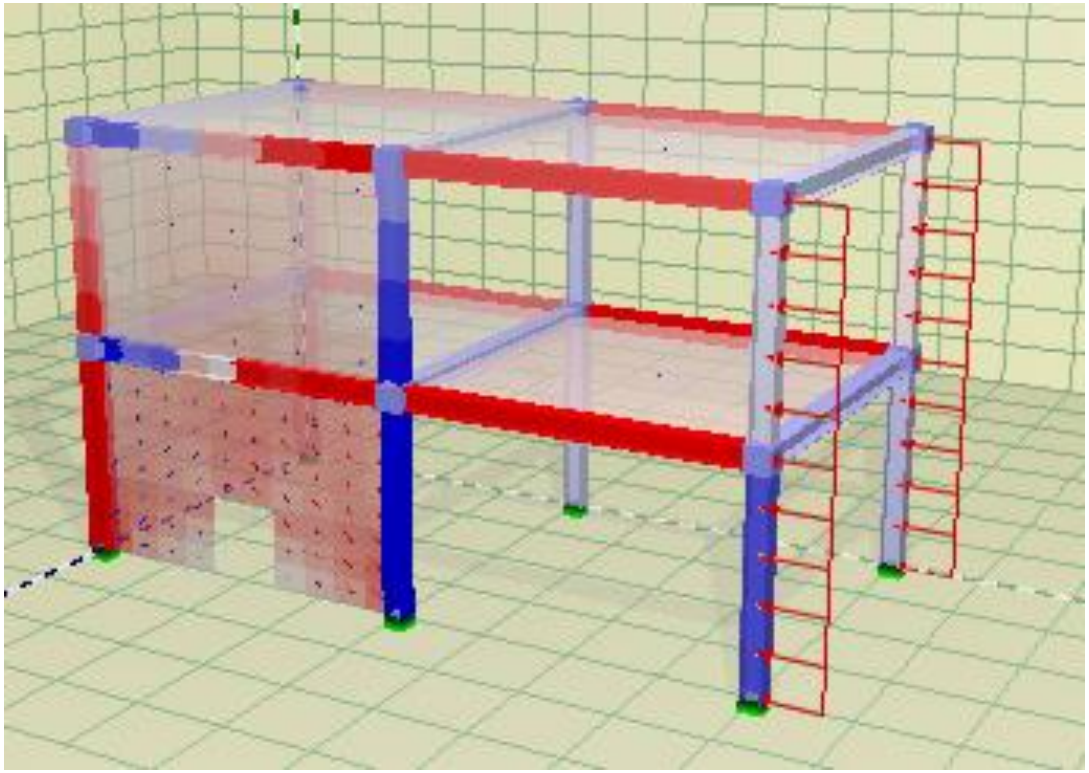

Plates examples

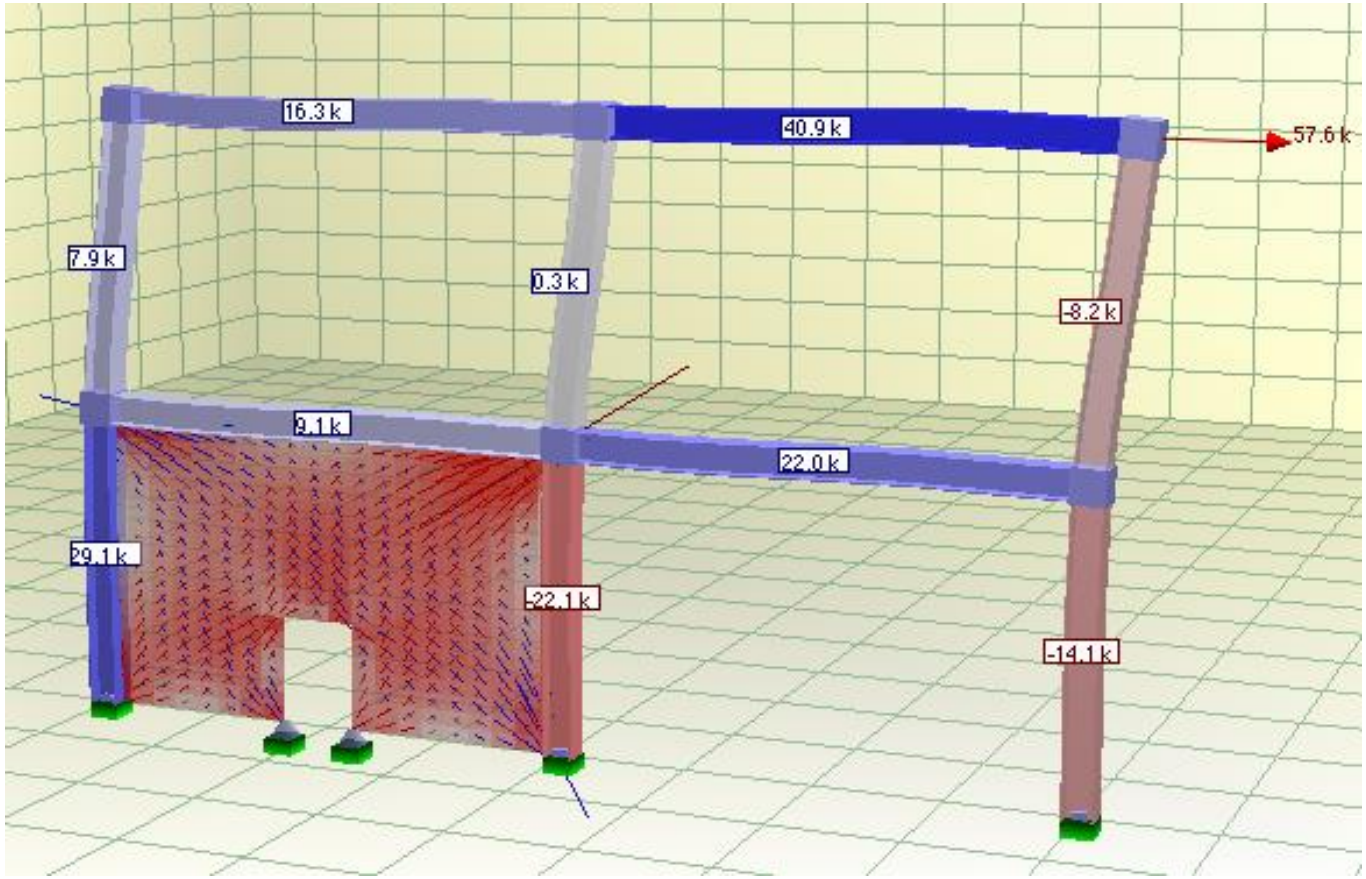

Plates examples

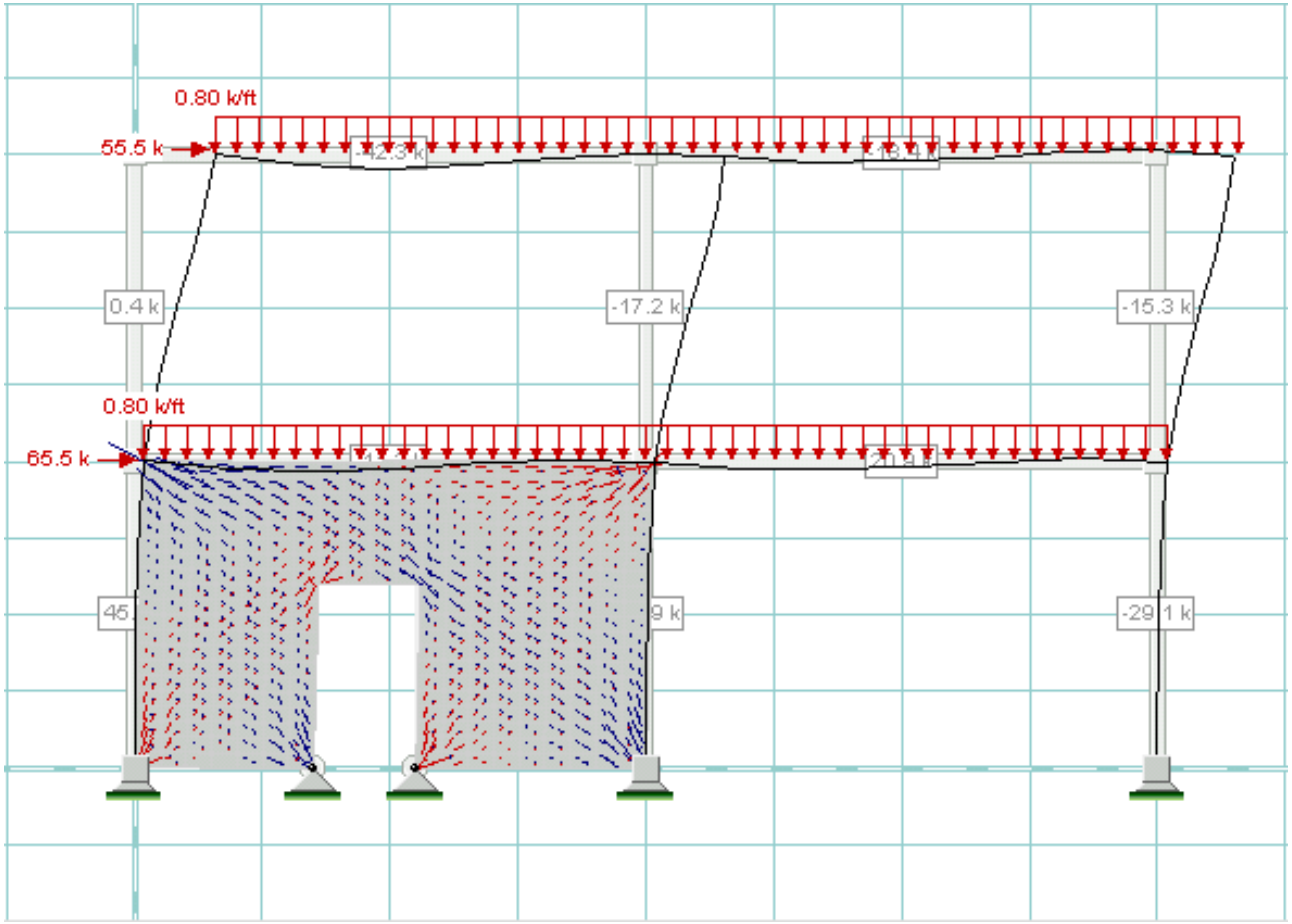

History of plate theory development

Euler was the first in 1776 to give a mathematical statement of plate problems. He performed a free vibration analysis of plate problem;

Bernoulli in 1789 attempted to justify theoretically the results of acoustic experiments of plate;

Chiladni in 1802 discovered the various modes of plate free vibrations;

Germain in 1826 derived a plate differential equation that lacked the warping term;

Lagrange in 1828 corrected Germain work by adding the missing term;

Cauchy in 1828 and Poisson in 1829 were first to formulate plate bending theory on the basis of theory of elasticity;

History of plate theory development (cont.)

Navier was the first in 1823 to consider the plate thickness as a function of rigidity D;

Kirchhoff in 1850 published an important thesis on the theory of thin plates. Kirchhoff theory contributed to the physical clarity of the plate bending theory and promoted its widespread use in practices;

Timoshenko made significant contribution to the theory and application of plate bending analysis. In 1940, he wrote the book "*Theory of Plates and Shells*" is still widely used today;

Hencky in 1921 made a contribution to the theory of large deformations and the general theory of elastic stability of thin plates;

History of plate theory development (cont.)

Huber (1923) developed an approximate theory of orthotropic plates;

Gehring (1877), Boussinesq (1879) and Lekhnitskii (1968) made an essential contribution on the general theory of anisotropic plates;

Reissner (1945) developed a rigorous plate theory which considers the deformation caused by the transverse shear forces;

Mindlin (1951) derived the theory for thick plate. He started from an assumption of displacement field instead of stress field.

History of plate theory development (cont.)

Special monographs:

Timoshenko, S.P., *History of Strength of Materials*, McGraw-Hill, New York, 1953.

Truesdell, C., *Essays in the History of Mechanic.*, Springer-Verlag, Berlin, 1968.

Plate theory

Of the numerous plate theories that have been developed since the late 19th century, two are widely accepted and used in engineering. These are:

The Kirchhoff–Love theory of plates (classical plate theory)

The Mindlin–Reissner theory of plates (first-order shear plate theory)

Plate theory

The Kirchhoff–Love theory is an extension of Euler–Bernoulli beam theory to thin plates. The theory was developed in 1888 by Love using assumptions proposed by Kirchhoff. It is assumed that a mid-surface plane can be used to represent the three-dimensional plate in two-dimensional form.

Plate theory

The following kinematic assumptions that are made in this theory:

- straight lines normal to the mid-surface remain straight after deformation
- straight lines normal to the mid-surface remain normal to the mid-surface after deformation
- the thickness of the plate does not change during a deformation.

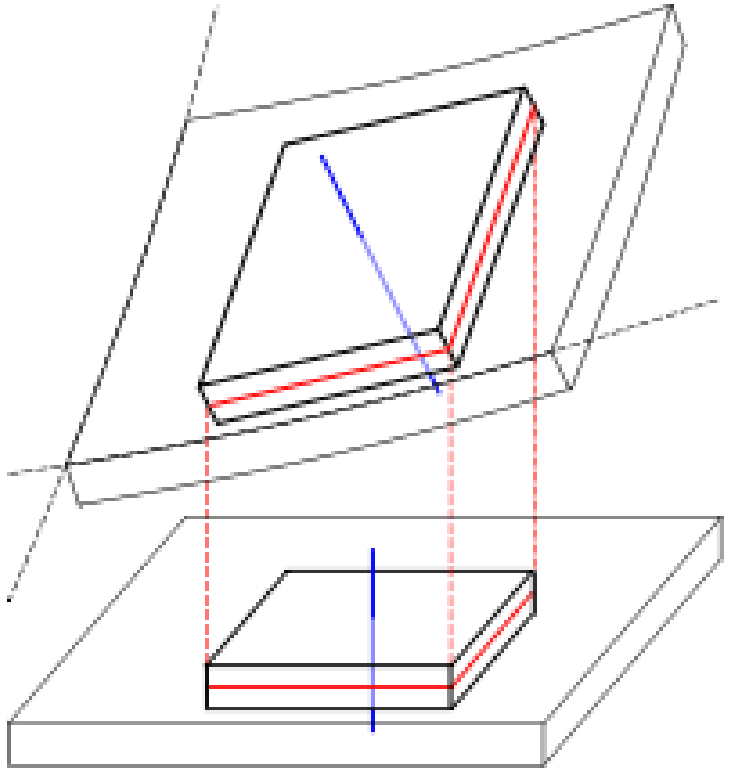

Plate theory

The Mindlin–Reissner theory of plates:

The straight lines is normal to the mid-surface and remains straight but not necessarily perpendicular to the mid-surface. It is also called theory of thick plate.

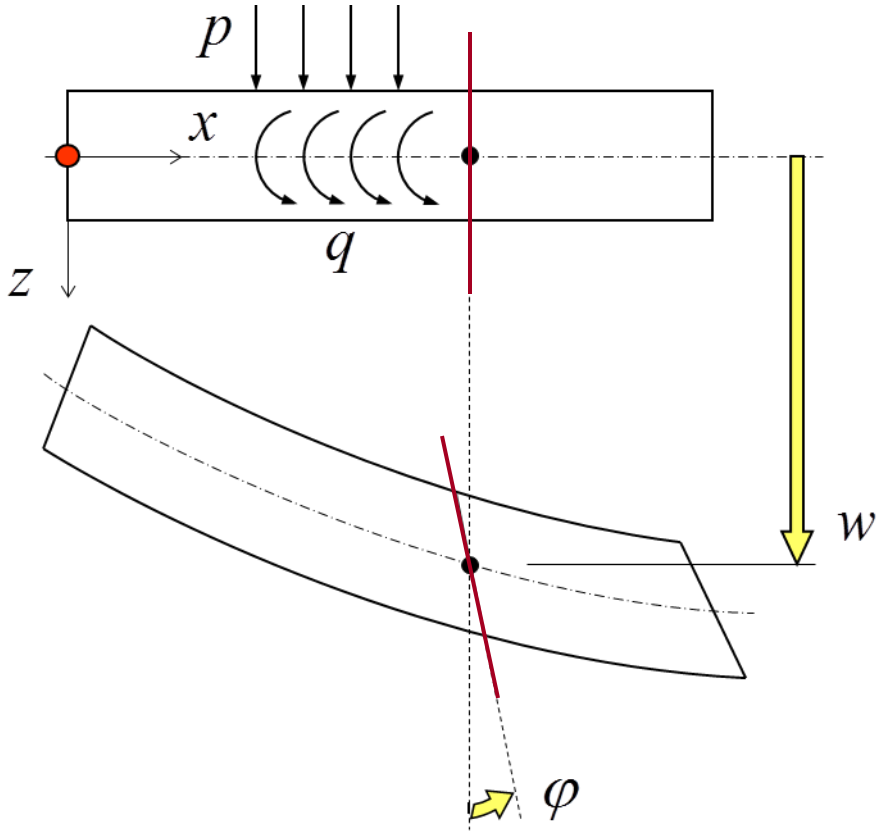

Plates clarification

$a/t \leq 8...10$: thick plate

$a/t \geq 80...100$: membrane

$8...10 \leq a/t \leq 80...100$: thin plate

if $w/t \leq 0.2$: stiff plate

if $w/t \geq 0.3$: flexible plate

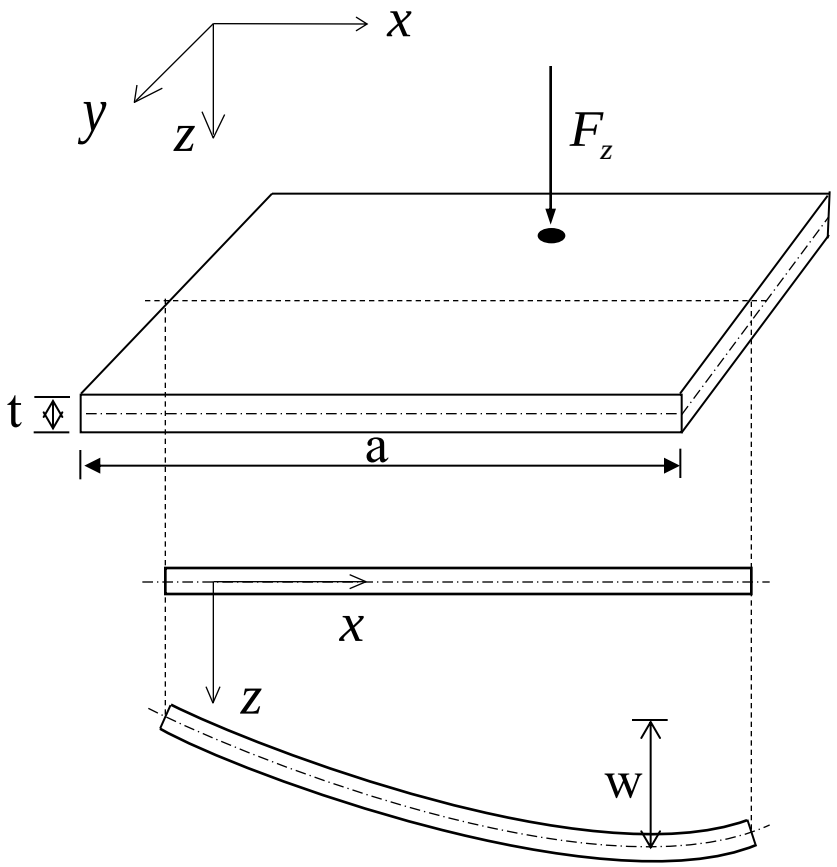

Classical beam theory

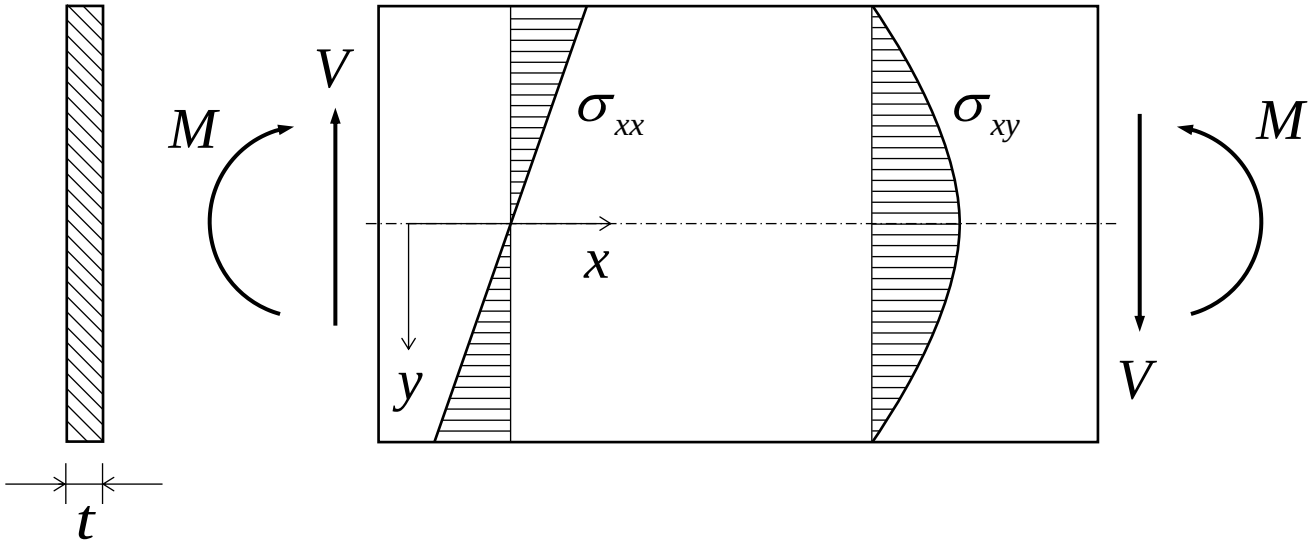

- Bernoulli's hypothesis

Deep beams

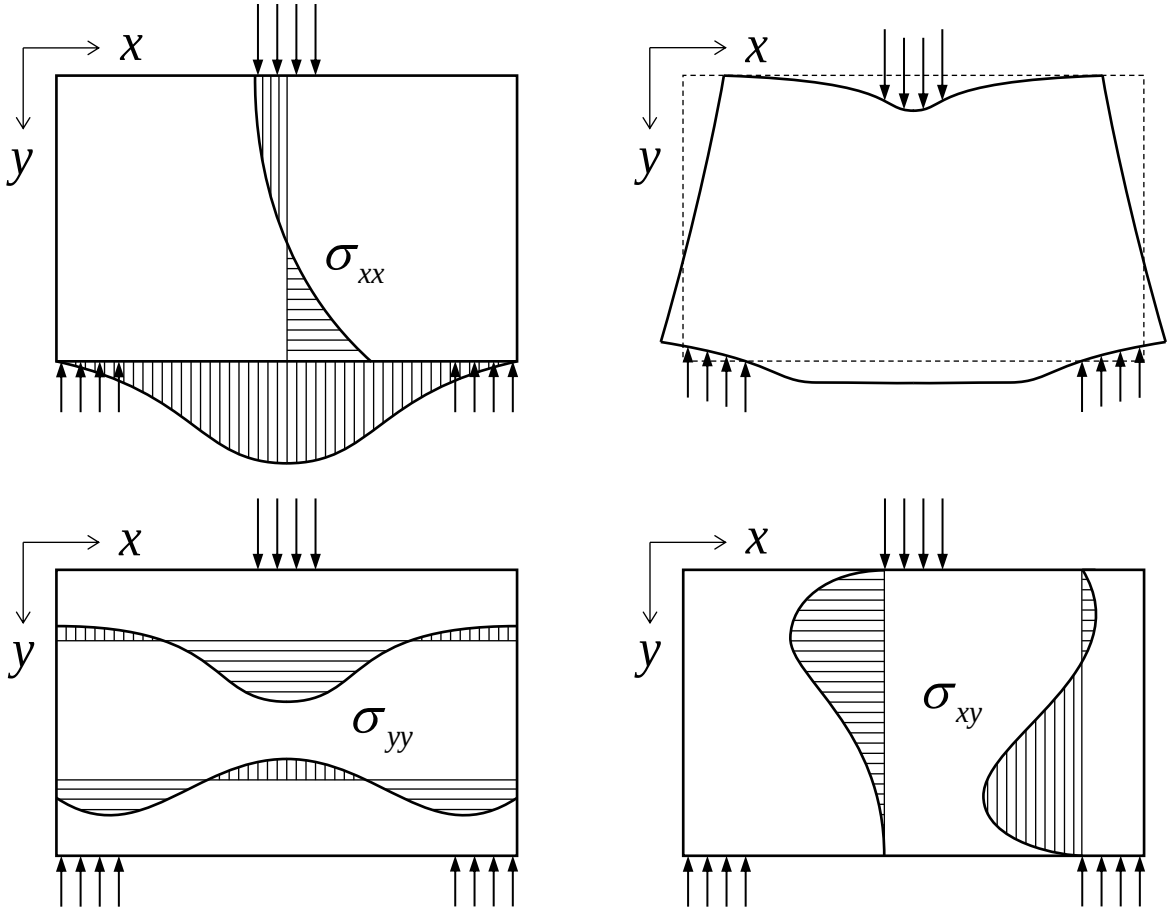

“Thin plate” loaded in-plane

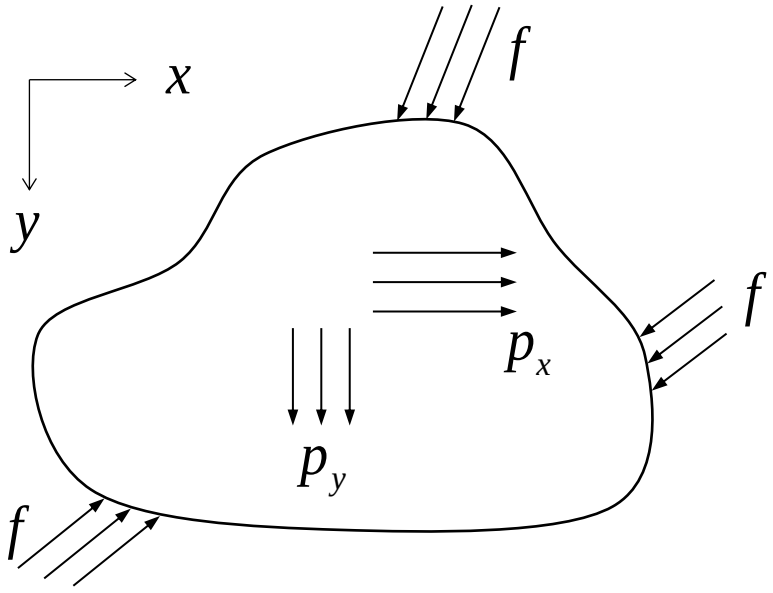

Uniaxially loaded plate

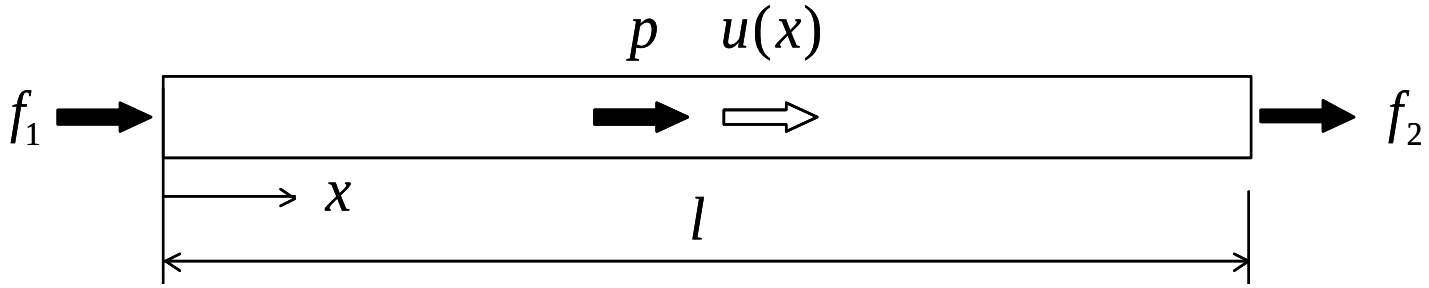

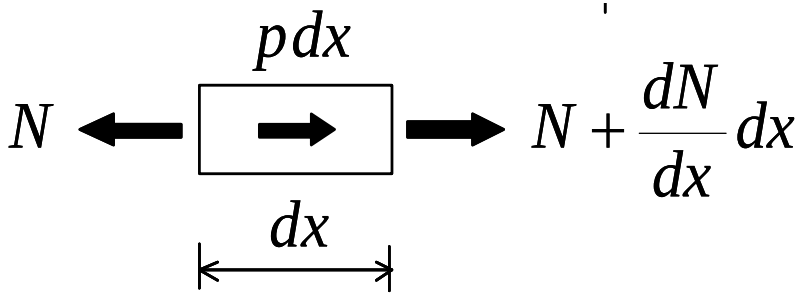

$$-\frac{dN}{dx} = p$$

equilibrium equation

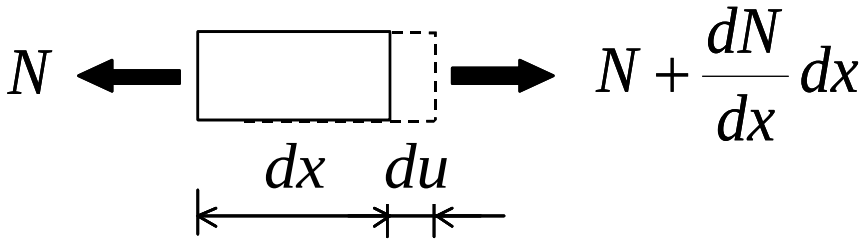

$$\varepsilon = \frac{du}{dx}$$

kinematic equation

Uniaxially loaded plate

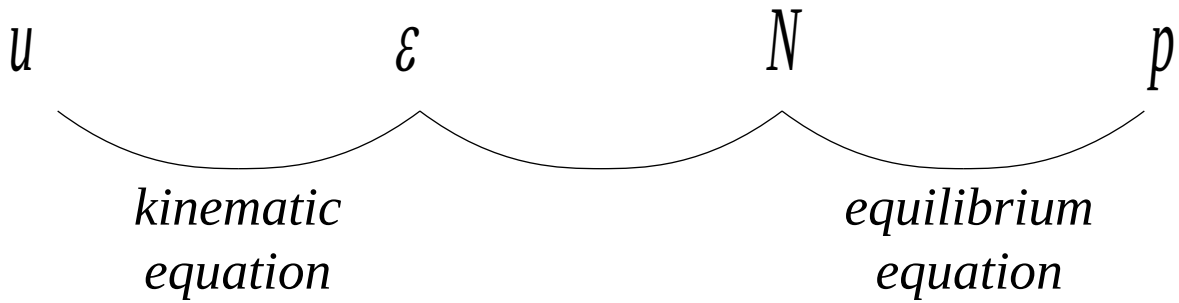

$$\varepsilon = \frac{du}{dx} \quad \Leftrightarrow \quad ? \quad \Leftrightarrow \quad -\frac{dN}{dx} = p$$

Uniaxially loaded plate

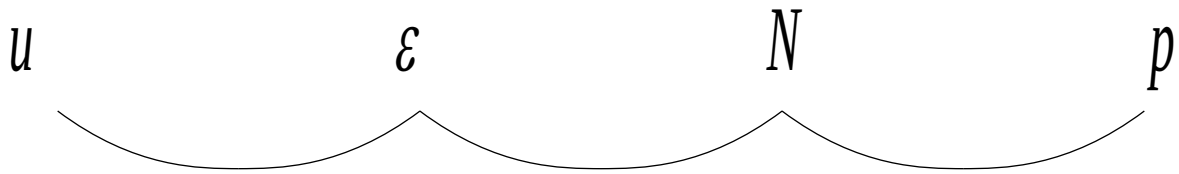

kinematic equation

constitutive equation

equilibrium equation

$$\varepsilon = \frac{du}{dx} \qquad N = EA\varepsilon \qquad -\frac{dN}{dx} = p$$

$$-\frac{dN}{dx} = -EA\frac{d\varepsilon}{dx} = -EA\frac{d}{dx}\left(\frac{du}{dx}\right) = -EA\frac{d^2u}{dx^2} = p$$

Uniaxially loaded plate

$$-EA\frac{d^2u}{dx^2} = p$$

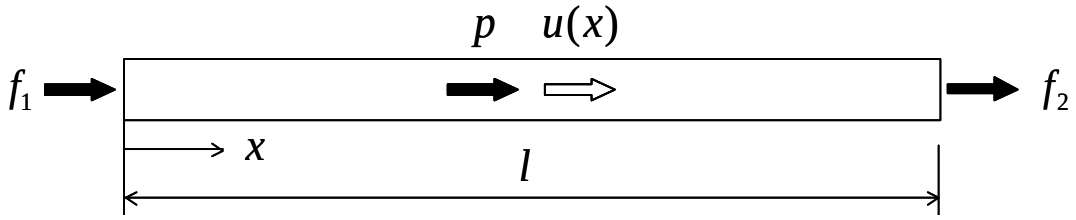

Can we solve this ?

Uniaxially loaded plate

$$-EA\frac{d^2u}{dx^2} = p$$

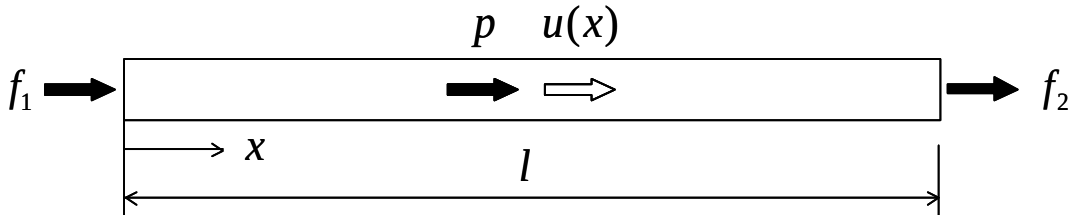

2 boundary conditions needed

Uniaxially loaded plate

$$-EA\frac{d^2u}{d^2x} = p$$

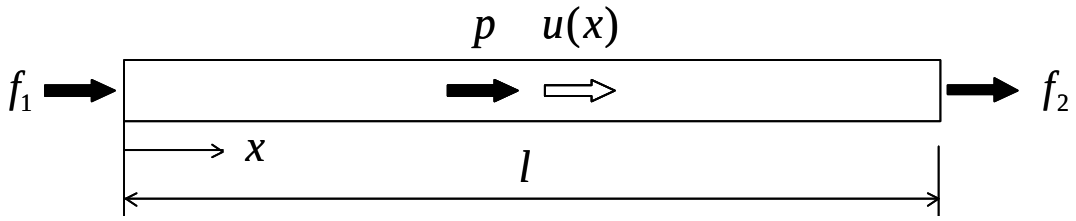

1 boundary condition needed at each end

at $x = 0$:

$u_1 = u_1^0$ or

$-N_1 = f_1$

at $x = l$:

$u_2 = u_2^0$ or

$N_2 = f_2$

Uniaxially loaded plate

$$-EA\frac{d^2u}{d^2x} = p$$

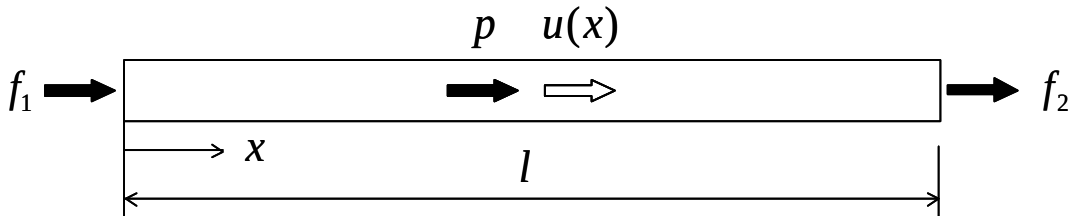

1 boundary condition needed at each end

at $x = 0$:

$u_1 = u_1^0$ or

$-N_1 = f_1$

at $x = l$:

$u_2 = u_2^0$ or

$N_2 = f_2$

displacement method or stiffness method

example

Problem:

A plate is loaded uniaxially by distributed load p. The length is 4a. A is the cross section.

E is the elastic modulus. The right side of the plate is fixed and the left side is free.

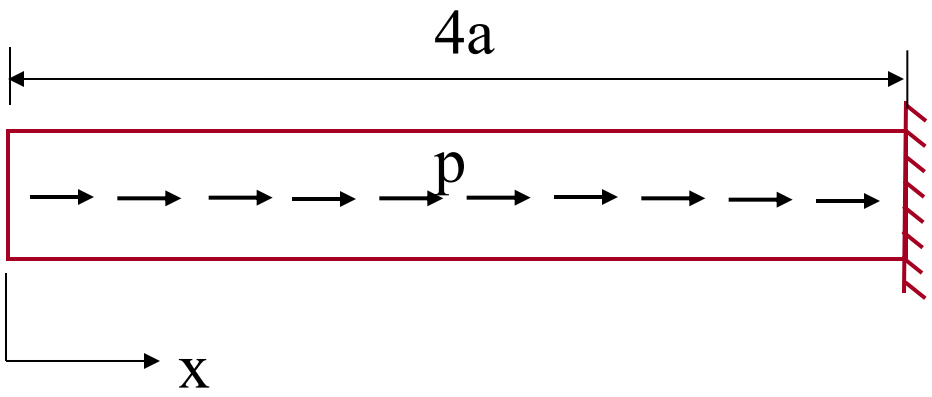

Question:

Plot the distribution of the displacement u(x) and the normal force N(x) along the plate x-axis.

example

Problem:

A plate is loaded uniaxially by distributed load p. The length is 4a. A is the cross section.

E is the elastic modulus. The right side of the plate is fixed and the left side is free.

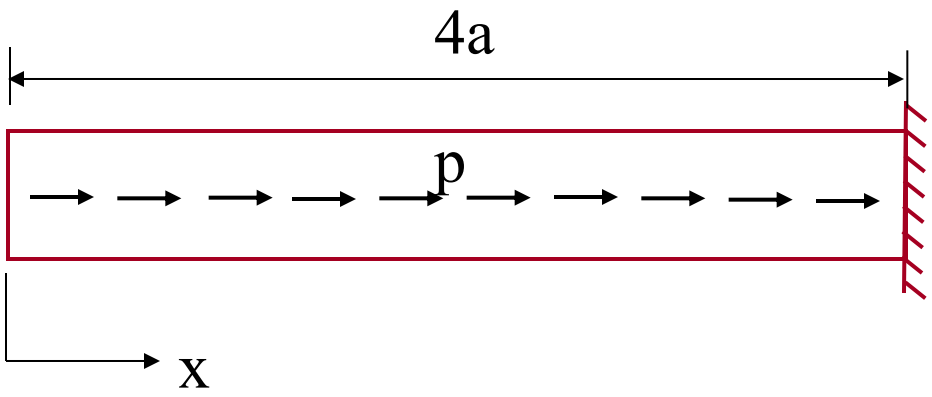

Question:

Plot the distribution of the displacement u(x) and the normal force N(x) along the plate x-axis.

$$-EA\frac{d^2u}{dx^2}=p$$

$$\varepsilon=\frac{du}{dx}$$

$$-\frac{dN}{dx}=p$$

example

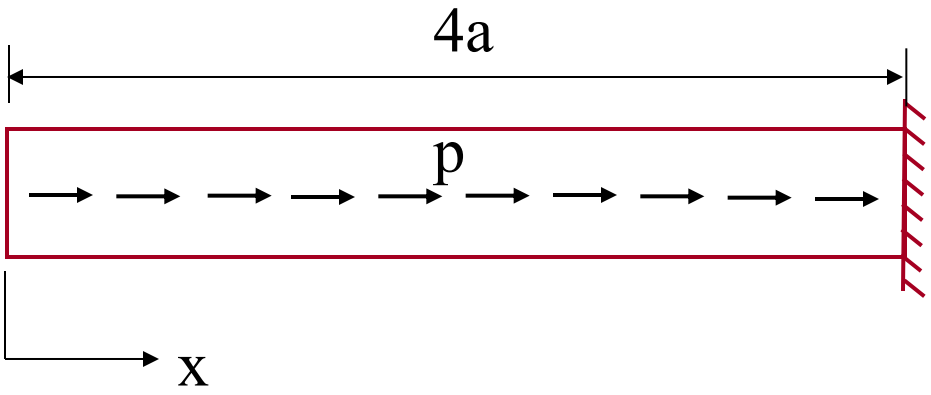

According to displacement method:

$$-EA\frac{d^2u}{dx^2}=p$$

It gives solution:

$$u(x)=-\frac{p}{2EA}x^2+c_1x+c_2$$

Kinematic equation gives: $$\varepsilon=\frac{du}{dx}=-\frac{p}{EA}x+c_1$$

Constitutive equation gives: $$N=EA\varepsilon=EA\left(-\frac{p}{EA}x+c_1\right)$$

example

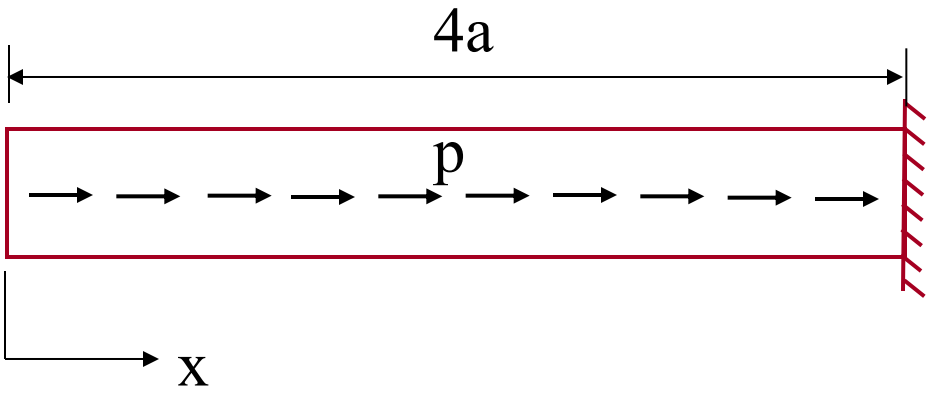

Boundary conditions:

$$\text{at } x = 0: \quad N_1 = 0 \qquad \text{at } x = 4a: \quad u(x = 4a) = 0$$

Hence

$$N\big|_{x=0} = 0 = EA\left(-\frac{p}{EA}0 + c_1\right) \Rightarrow c_1 = 0$$

$$u(4a) = -\frac{p}{2EA}16a^2 + c_2 = 0 \Rightarrow c_2 = \frac{8pa^2}{EA}$$

The final solutions are:

$$N = -p \cdot x$$

$$u(x) = \frac{-p}{2EA}x^2 + \frac{8pa^2}{EA}$$

example

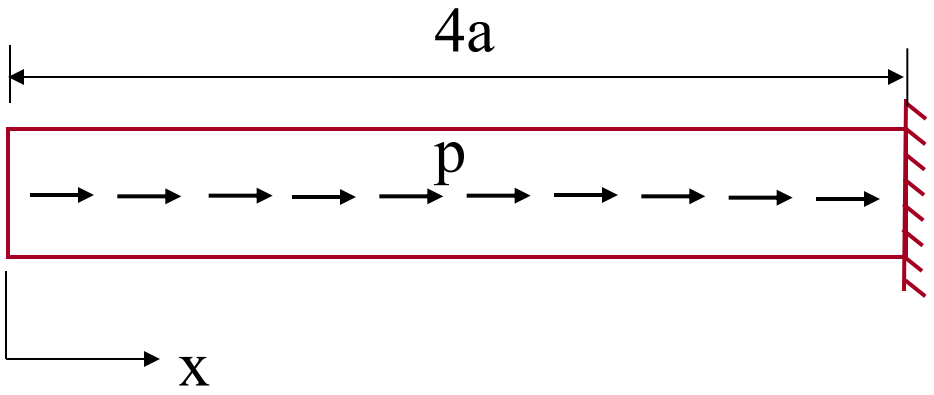

$$N = -p \cdot x$$

$$u(x) = \frac{-p}{2EA} x^2 + \frac{8pa^2}{EA}$$

