Delft University of Technology
Faculty of Civil Engineering and Geosciences
Structural Mechanics Section

Write your name and study number at the top right-hand of your work.

Exam CIE4143 Shell Analysis
Monday 29 June 2015, 14:00 – 17:00 hours

Problem 1 (30 minutes) 1.7 points

Explain shortly the meaning of the following eight words in relation to shells structures.

Orthogonal parameterisation
Helicoid
Minimal surface
Edge disturbance
Edge beam
Linear stability analysis
Loof's formulas
Geodesic sphere

Problem 2 (30 minutes) 1.7 points

a Figure 1 shows a part of a shell, edge beam and column. Add to this figure the variables for the directions, forces and moments (for example x, n_{xx} , ... Make clear which variable belongs to which arrow.) (You can hand in this page with your answers.)

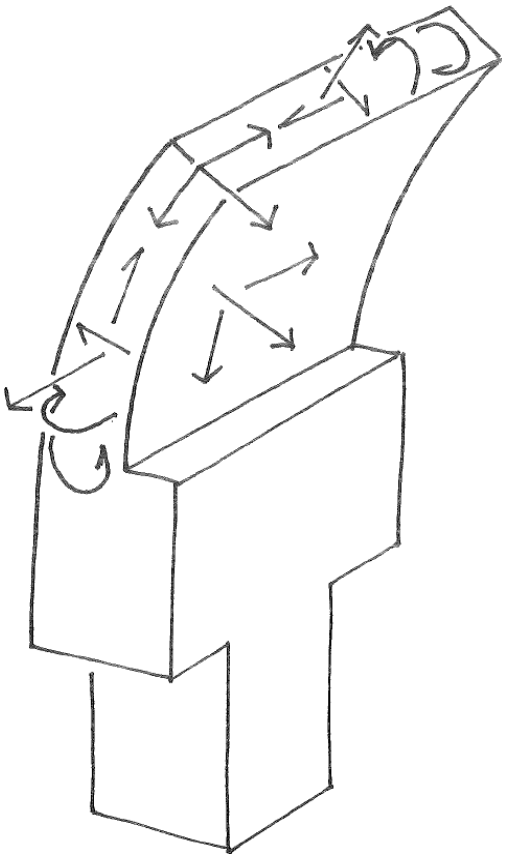

Figure 1. Part of shell, edge beam and column

b Draw a finite element model of the shell part. Use shell elements, beam elements, tyings (rigid links) and nodes. Make clear which part is what.

Problem 3 (30 minutes) 1.7 points

a How many dofs has a node of a shell finite element model. Choose A, B, C or D.

A 1
B 3
C 5
D 6

b Eight-node shell elements are better than four-node shell elements. Why is this? Choose A, B, C or D.

A If both element types have the same size than the eight-node elements are more accurate.
B Eight-node elements are more accurate per degree of freedom.
C Eight-node elements better fit to the curved geometry of shells.
D The computation time of eight node elements is smaller.

c A new type of finite element is under development. These elements looks like NURBSes. What is the advantage of these new elements? Choose A, B, C or D.

A It will be possible to include more details in shell finite element models.
B The new elements might be more accurate than other elements.
C It will be easy to transform CAD models into finite element models.
D The designer will do the finite element analyses and there will be no need for a structural engineer.

d Mohr-Coulomb values needs to be smaller than 1. However, a Mohr-Coulomb value can also be negative. How can this be interpreted?
Choose A, B, C or D.

A The material is cracked.
B The material is loaded in shear but not failing as yet.
C The material is prestessed.
D It is a mathematical result without interpretation.

e What is your favourite way of studying shell structures?
You can choose more than one answer.

A Listening to the teacher.
B Doing individual assignments in class.
C Doing group assignments in class.
D Reading the handouts at home.

Problem 4 (30 minutes) 1.7 points

a We can plot many finite element results. However, often we look only at the principal stresses or the Von Mises stress. We do not look at the *xx*, *yy* and *xy* values of stresses, membrane forces and moments. What is the reason for this?

b Suppose we need to increase the stiffness of a shell. Do we need to increase or reduce the Gaussian curvature? Show this with formula's for positive and negative Gaussian curvatures.

c What uncertainties are important in predicting the strength of small shell objects? (such as plastic bowls and steel cups)

d What is important in the process of building a geodesic sphere?

Problem 5 (30 minutes) 1.7 points (Design by Jelle Dijkema, shell exam August 2014)

A structure consists of eight reinforced concrete hypars (Fig. 2). The shell thickness is t = 100 mm. Snow load plus self-weight is 3 kN/m². Safety factors are included in all numbers. (The red lines are not structural compontens.)

a Does this design need cables? If so, add these.

b Calculate the membrane forces and related stress.

c Calculate the largest bending moment and related stress in the hypars. (Assume that the material is linear-elastic.)

d Calculate the forces in the edge beams, columns and cables if present.

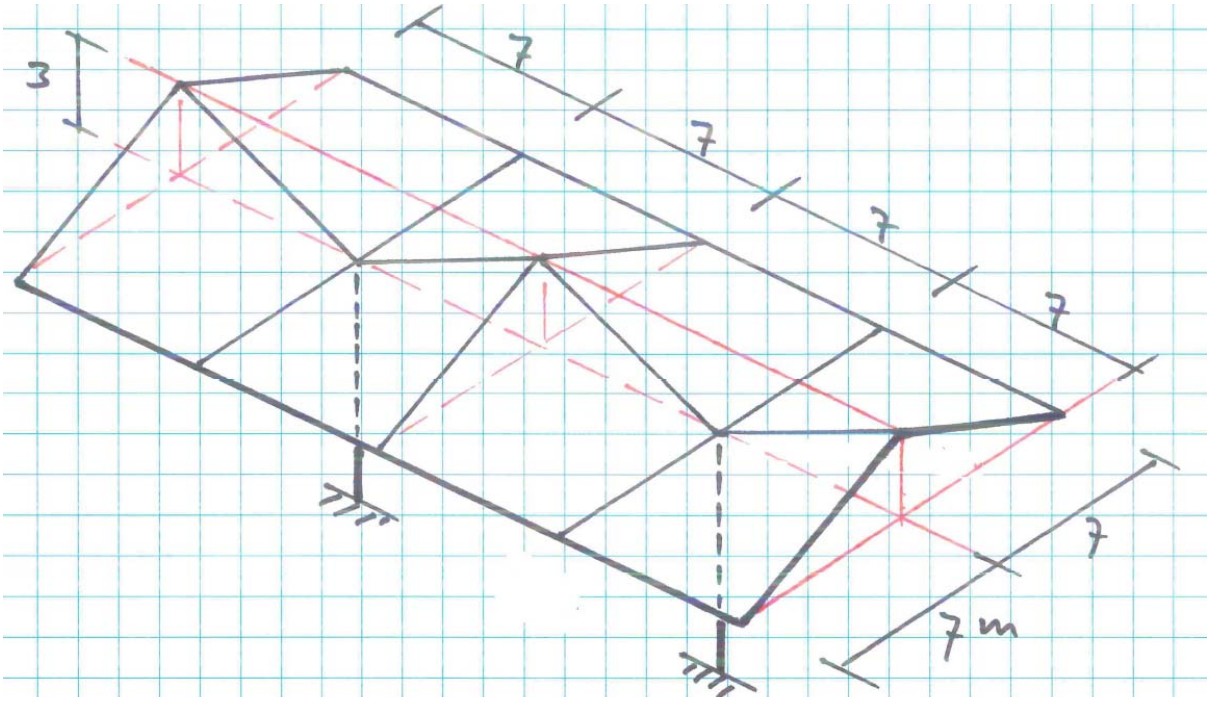

Figure 2. A eight hypar building (The red lines are not structural components.)

e Check buckling. Use Young's modulus is 15 x 10^6 kN/m².

f Is this design feasible? Explain your answer.

Problem 6 (30 minutes) 1.7 point

Design an assembly of hypar shells to be analysed in the next Shell exam (August 2015).
It needs to be
1) different than in this exam and different than in the previous exams,
2) different than the examples in the handouts,
3) stable,
4) not extremely complicated.
You do not need to analyse this shell.

Answers to problem 1

Orthogonal parameterisation …… Description of a surface in two parameters *u* and *v*. The lines *u* = constant and the lines *v* = constant are perpendicular.

Helicoid …… $\bar{x} = a u \qquad \bar{y} = a v \cos u \qquad \bar{z} = a v \sin u$

Minimal surface …… $k_m = 0$

Edge disturbance …… Large stresses at the edges of a shell.

Edge beam …….. Beam at the edge of a shell to prevent in-extensional deformation.

Linear stability analysis …… Computation of the theoretical buckling load of a perfect shell.

Loof's formulas …… $m = 0.551 \frac{p}{l^2} (a t l)^{\frac{4}{3}} \qquad m = -0.149 \frac{p}{l^2} (a t l)^{\frac{4}{3}}$

Geodesic sphere …… A grid of bars in the shape of a sphere. The bars form triangles. Each joint connects 5 or 6 bars.

Answers to problem 2

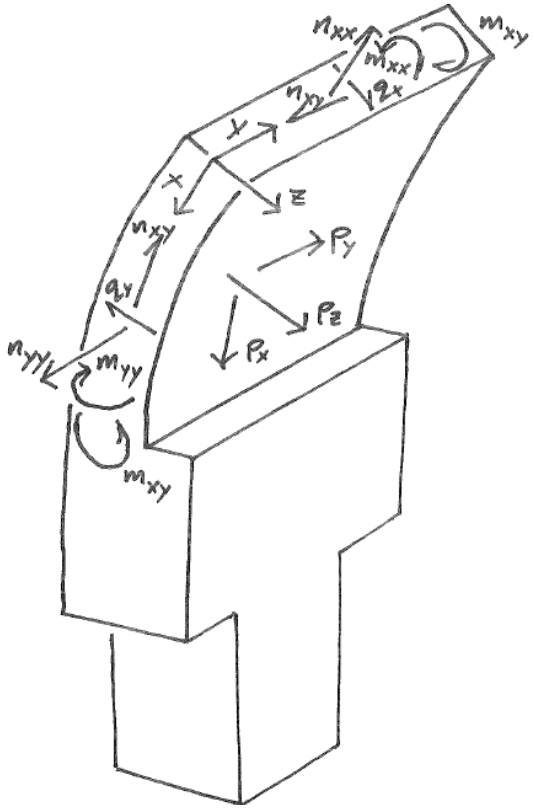

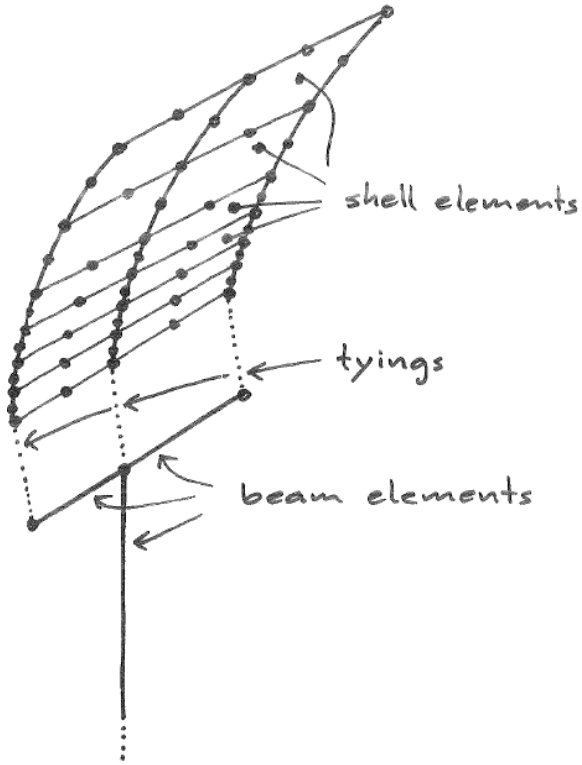

Answers to problem 3

a D
b B (The number of dofs of a model is important because it determines the computation time.)
c C
d C
e A 43% B 14% C 31% D 12%

Answers to problem 4

a The *xx*, *yy* and *xy* values depend on the element coordinate system. The software does not always put the element coordinate system in the direction that we would like them to be. Principal stresses and the Von Mises stress do not depend on the element coordinate system.

b We need to increase the absolute value of the Gaussian curvature.

For positive Gaussian curvatures the deflection due to a point load is $u_z = \frac{\sqrt{3}}{4}\frac{P}{Et^2}\frac{\sqrt{1-\nu^2}}{\sqrt{k_G}}$.

For negative Gaussian curvatures the deflection due to a point load is $u_z = 0.92\frac{P}{Et^2}\frac{\sqrt{1-\nu^2}}{\sqrt{-k_G}}$.

c Yong's modulus, yield strength and knock down factor; these are important for the strength and difficult to determine accurately.

d In the beginning it is easy to connect the laths. However, when the structure becomes larger it is difficult to lift the structure. Before the sphere is completed it can deform in-extensionally, which needs to be prevented during lifting. Moreover, it is difficult to make the connections when there are large forces in the laths. In our sphere some joints failed because the brass buckled, screws were pulled out of the wood and the wood split.

Answers to problem 5

a Yes, cables are necessary (see figure).

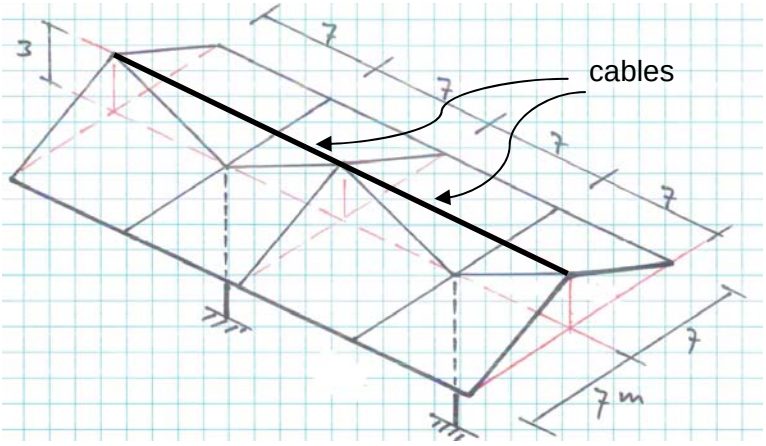

b $a = \dfrac{7 \times 7}{3} = 16.33\ \text{m}$

$n_{xy} = \frac{1}{2} a p = \frac{1}{2} 16.33 \times 3 = 24.5\ \text{kN/m}$

$\sigma_{xy} = \dfrac{n_{xy}}{t} = \dfrac{24.5}{0.1} = 245\ \text{kN/m}^2 = 0.25\ \text{N/mm}^2$

c $m_{xx} = 0.551 \dfrac{p}{l^2} (a t l)^{\frac{4}{3}} = 0.551 \dfrac{3}{7^2} (24.5 \times 0.1 \times 7)^{\frac{4}{3}} = 0.806\ \text{kN}$

$\sigma_{xx} = \dfrac{m_{xx}}{\frac{1}{6} t^2} = \dfrac{0.806}{\frac{1}{6} 0.1^2} = 483\ \text{kN/m}^2 = 0.48\ \text{N/mm}^2$

d

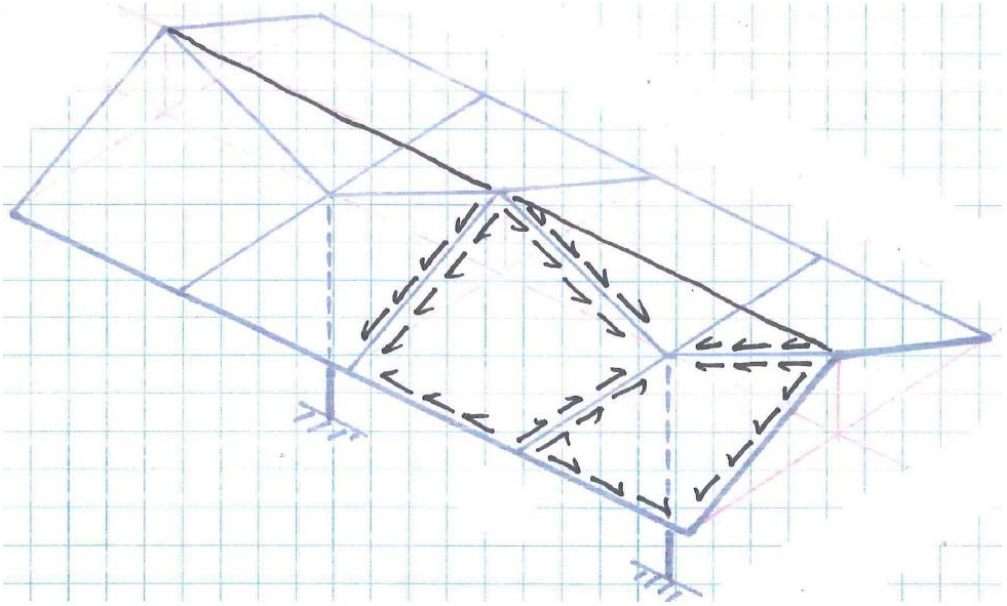

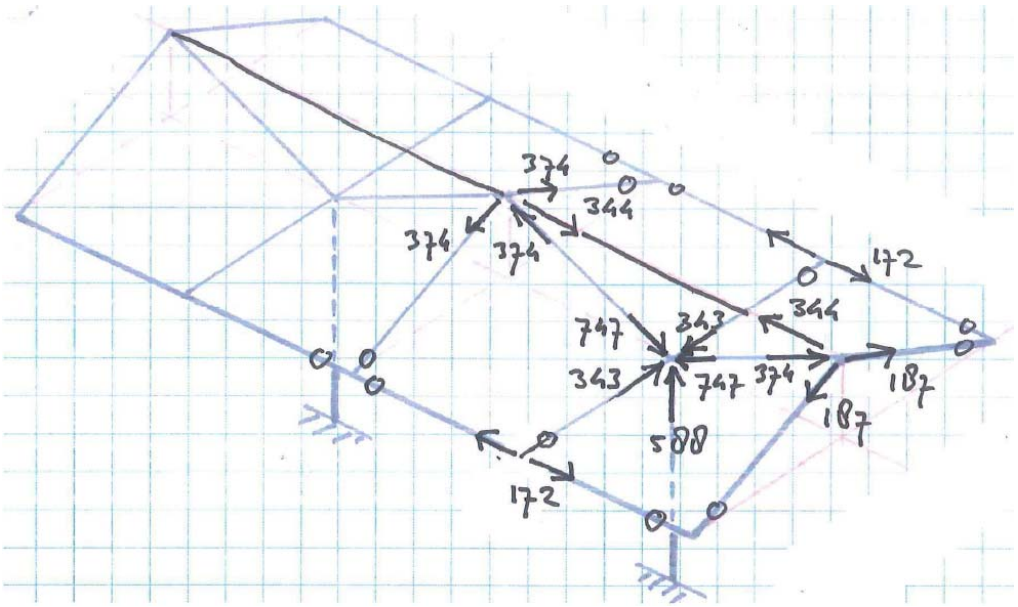

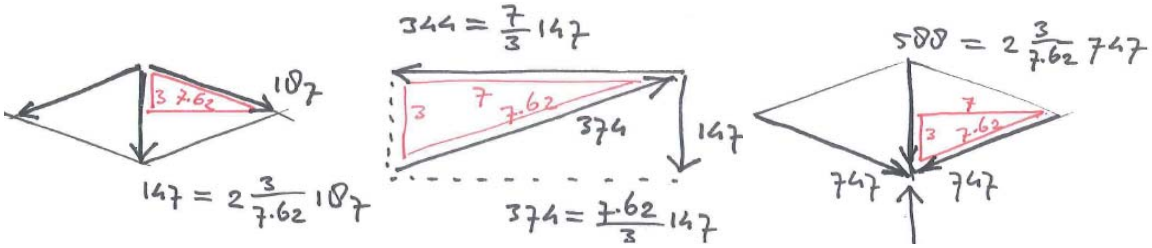

e $n_{cr} = 0.6\dfrac{E\,t^2}{a} = 0.6\dfrac{15\times10^6\times0.1^2}{16.33} = 5510\,\text{kN/m}$

24.5 < 5510 therefore, no buckling

f The stresses are small and it does not buckle, therefore, it is feasible. However, it needs to be checked also for asymmetric snow load and for wind load.