Delft University of Technology
Faculty of Civil Engineering and Geosciences
Structural Mechanics Section

Write your name and study number at the top right-hand of your work.

Exam CIE4143 Shell Analysis
Tuesday 9 August 2016, 13:30 – 16:30 hours

Problem 1 (30 minutes) 1.7 points

Explain shortly the meaning of the following eight words in relation to shells structures.

Imperfection sensitivity
O(*h*)
Membrane
Torsion moment
Strain gauge
Characteristics
Zeckendorf plaza
Plate behaviour

Problem 2 (30 minutes) 1.7 points

a Figure 1 shows a part of a shell and edge beam with coordinate system. Draw in this figure the shell loading, membrane forces, moments and shear forces in the positive directions. (You can hand in this page with your answers.)

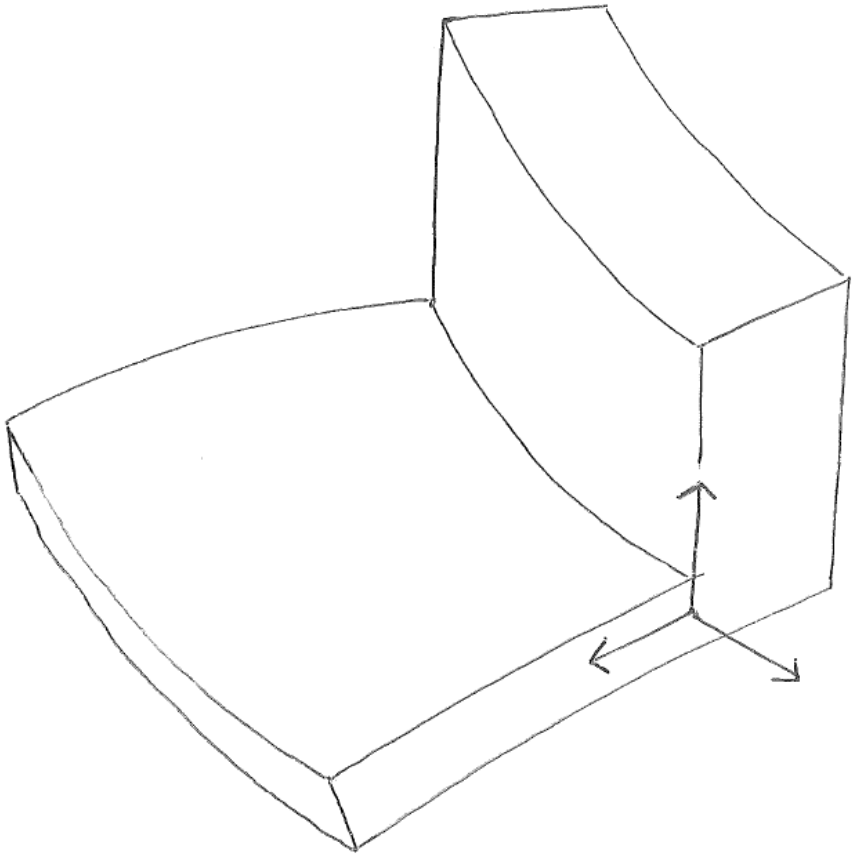

Figure 1. Part of shell and edge beam

b When we analyse a shell in SCIA Engineer we can choose to use the Kirchhoff theory or the Mindlin-Reissner theory. However, there exists a Kirchhoff plate theory but there exists no Kirchhoff shell theory. What do the programmers mean? Which words should they have used instead of Kirchhoff and Mindlin-Reissner?

c We mathematically analyse thin shells with the Sanders-Koiter equations. However, the shell finite elements in most programs are not based on these equations. How are the most used shell elements derived?

d What is a clear and reproducible method of adding shape imperfections to a shell finite element model? How do we determine the amplitude of this imperfection?

Problem 3 (30 minutes) 1.7 points

A shell has the shape of a halve sphere and is loaded by a force P perpendicular to its surface. The force is distributed over a small circular area with diameter d.

Radius of the sphere	a	= 1 m
Thickness	t	= 2 mm
Young's modulus	E	= 2.1 10^5 N/mm^2
Poisson's ratio	ν	= 0.3
Force	P	= 1 kN
Force diameter	d	= 4 mm

a Calculate the deflection, moments and membrane forces under the force.

b Calculate the stresses under the force.

c Suppose that the force is not distributed over a small area; it is a pure point load. In what way would this change the previous answers?

d In this problem the supports of the shell are not specified. Under what condition are the supports not important for the previous answers?

Problem 4 (15 minutes) 0.8 points

Figure 2 shows a cross-section of Sillogue water tower. Draw in the figure how the weight of the water flows to the soil. (You can hand in this page with your answers. Do not forget to show the presence of hoop forces.)

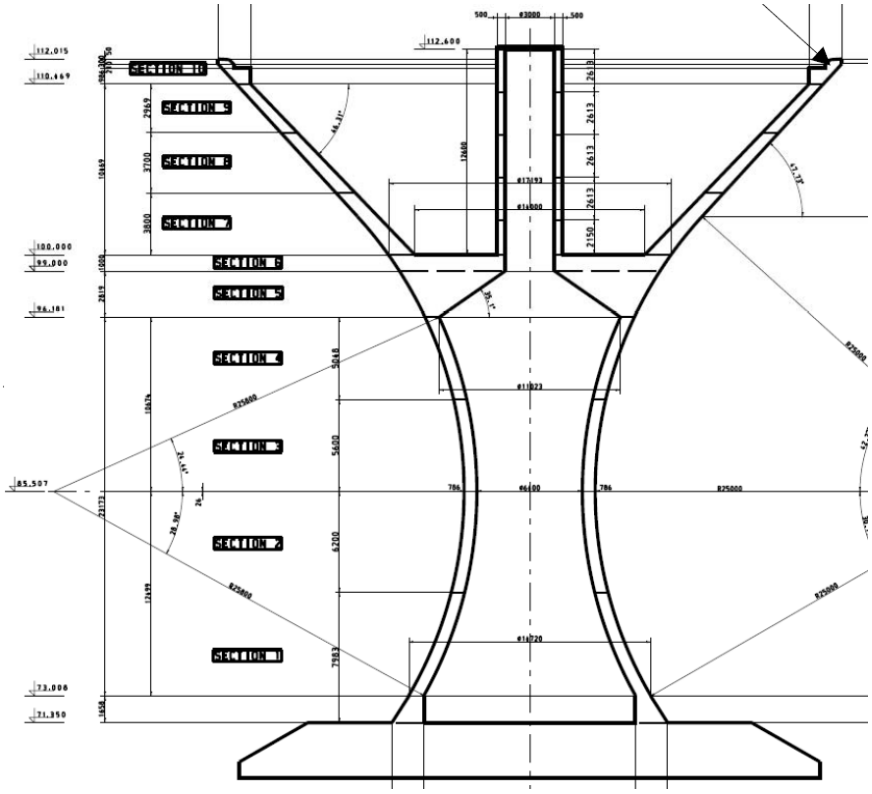

Figure 2. Cross-section of Sillogue water tower

Problem 5 (30 minutes) 1.7 points

Consider a point of a shell structure. The curvatures in this point are

$$k_{xx} = \frac{1}{30\ \text{m}}, \quad k_{yy} = \frac{-1}{30\ \text{m}}, \quad k_{xy} = \frac{1}{40\ \text{m}}.$$

The membrane forces in this point are

$$n_{xx} = 73.0\ \text{kN/m}, \quad n_{yy} = -10.7\ \text{kN/m}, \quad \frac{n_{xy} + n_{yx}}{2} = -17.2\ \text{kN/m}.$$

The moments in this point are

$$m_{xx} = 83.4\ \text{kNm/m}, \quad m_{yy} = 0, \quad m_{xy} = 93.5\ \text{kNm/m}.$$

The shear forces in this point are

$$q_x = 90.3\ \text{kN/m}, \quad q_y = -32.6\ \text{kN/m}.$$

a Calculate n_{xy} and n_{yx}.

The considered point is on the shell edge. The edge is in the *x* direction and the *y* direction points outwards. The edge is supported $u_x = u_y = u_z = 0$ but not fixed φ_x = free. The torsion moment m_{xy} does not change along the edge.

b Calculate the support reactions.

Problem 6 (30 minutes) 1.7 point

Give the shell boundary conditions for an edge in the *y* direction and the *x* axis pointing outwards (Fig. 3).

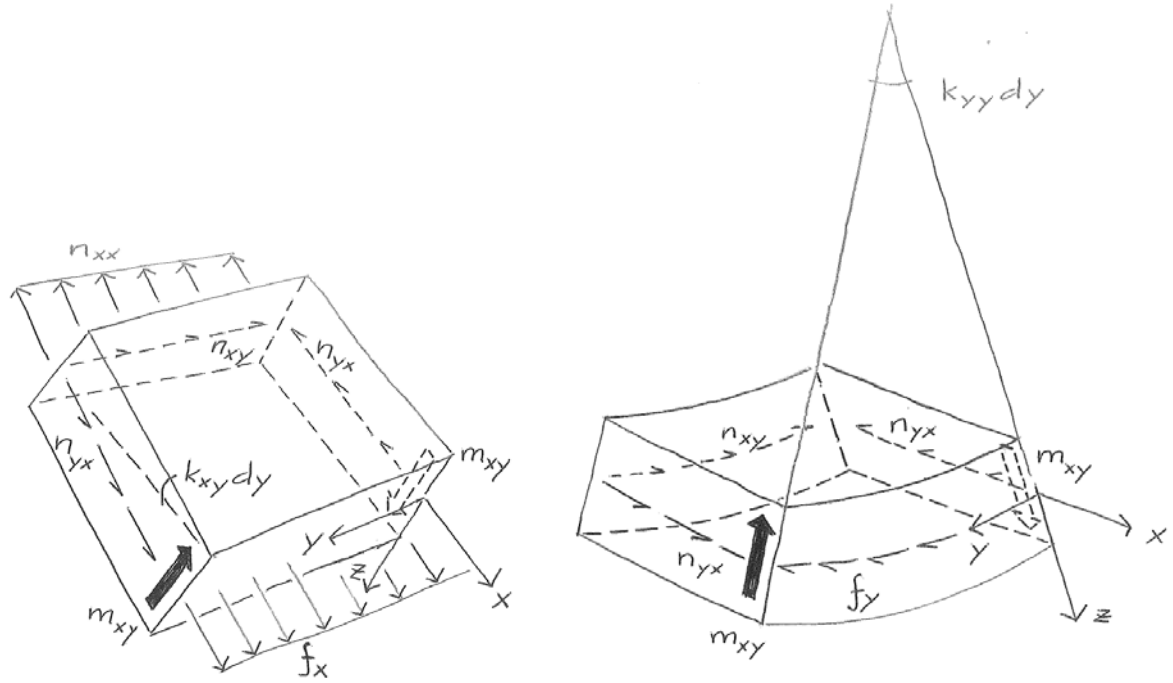

Figure 3. Equilibrium of a small part of a shell edge

Problem 7 (15 minutes) 0.7 point

In flat plates that are loaded perpendicularly there are no torsion moments in fixed edges. This can be proven with the plate equations. However, in shells this is not true. On which page of the shell reader can be observed that this is not true? Explain your answer.

Answers to problem 1

Imperfection sensitivity ……..	The stability of shell structures depends strongly on small deviations of the perfect shape.
O(*h*) ……..	"Order h"; Approximation of the error of values computed by shell finite elements. In this case the error is linear in the thickness *h*.
Membrane ……..	4000 < *a* / *t*
Torsion moment ……..	m_{xy} Resultant of shear stresses in a shell cross-section
Strain gauge ……..	Sensor for measuring strains based on the electrical resistance of a thin wire
Characteristics ……..	Lines in the solution to hyperbolic differential equations
Zeckendorf plaza ……..	4 hypar shell in Denver, USA
Plate behaviour ……..	The shape and supports of a shell can be such that it behaves as a flat plate.

Answers to problem 2

a

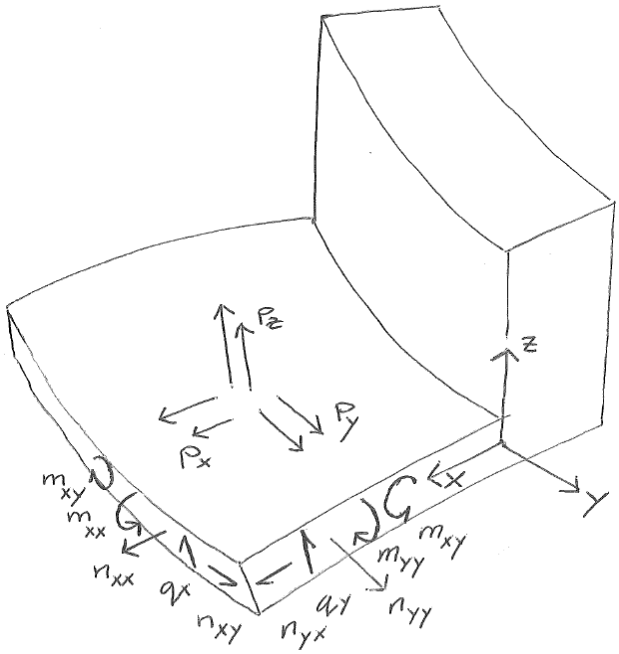

b Kirchhoff theory -> no shear deformation
(for thin plates and thin shells)
Mindlin-Reissner theory –> shear deformation
(for thick plates and thick shells)

c Shell finite elements are derived from a solid element (volume element). The solid element dofs are replaced by shell element dofs. Reduced integrations are used because without this the elements are too stiff in bending.

d Imperfection is the mode shape of the smallest buckling load factor. Imperfection amplitude can be determined by measuring shells that have been constructed with a similar method.

Answers to problem 3

a $u_z = \frac{\sqrt{3}}{4}\frac{P a}{E t^2}\sqrt{1-\nu^2} = \frac{\sqrt{3}}{4}\frac{1000\times 1000}{2.1\,10^5\,2^2}\sqrt{1-0.3^2} = 0.49\ \text{mm}$

$n_1 = n_2 = -\frac{\sqrt{3}}{8}\frac{p}{t}\sqrt{1-\nu^2} = -\frac{\sqrt{3}}{8}\frac{1000}{2}\sqrt{1-0.3^2} = -103\ N/\text{mm}$

$m_1 = m_2 = \frac{1}{4\sqrt[4]{12}}\frac{P\sqrt{a t}}{d}\frac{1+\nu}{\sqrt{1-\nu^2}} = \frac{1}{4\sqrt[4]{12}}\frac{1000\sqrt{1000\times 2}}{4}\frac{1+0.3}{\sqrt{1-0.3^2}} = 1999\ \text{Nmm/mm}$

(It has been reported that the moment formula is not correct. This is being checked and the reader will be updated at the end of the year.)

b outside $\sigma_{//} = \frac{n_1}{t} - \frac{m_1}{(\frac{1}{6}t^2)} = -3050\ \text{N/mm}^2$ $\qquad \sigma_{\perp} = \frac{P}{\frac{1}{4}\pi d^2} = 80\ \text{N/mm}^2$

inside $\sigma_{//} = \frac{n_1}{t} + \frac{m_1}{(\frac{1}{6}t^2)} = 2947\ \text{N/mm}^2$ $\qquad$ (which leads to yielding)

c The linear elastic bending moments go to infinity and consequently the stresses go to infinity.

d Supports need be far away from the force. In-extensional deformation should not occur.

Answers to problem 4

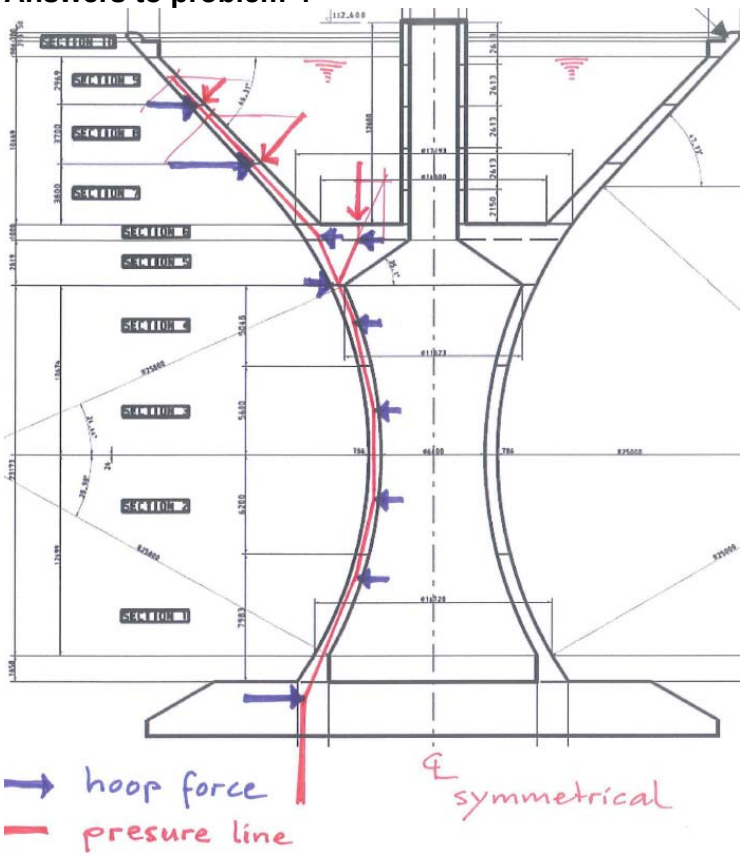

Answers to problem 5

a Sanders-Koiter equation 6;

$$k_{xy}(m_{xx}-m_{yy})-(k_{xx}-k_{yy})m_{xy}+n_{xy}-n_{yx}=0$$

$$\frac{1}{40}(83.4+0)-(\frac{1}{30}+\frac{1}{30})93.5+n_{xy}-n_{yx}=0$$

$$-4.15+n_{xy}-n_{yx}=0$$

$$\left.\begin{aligned}\frac{n_{xy}-n_{yx}}{2}&=2.07\\ \frac{n_{xy}+n_{yx}}{2}&=-17.2\end{aligned}\right\}\quad \begin{aligned}n_{xy}&=-15.1\text{ kN/m}\\ n_{yx}&=-19.3\text{ kN/m}\end{aligned}$$

b $f_x=n_{yx}-k_{xx}m_{xy}=-19.3-\frac{1}{30}93.5=-22.0$ kN/m

$f_y=n_{yy}-k_{xy}m_{xy}=-10.7-\frac{1}{40}93.5=-13.0$ kN/m

$f_z=q_y+\frac{\partial m_{xy}}{\partial x}=-32.6+0=-32.6$ kN/m

Check

$m_x = -m_{yy} = 0$ kNm/m (not a support reaction)

Answer to problem 6

Impose displacement u_x or line load $n_{xx} - k_{xy} m_{xy}$.

Impose displacement u_y or line load $n_{xy} + k_{yy} m_{xy}$.

Impose displacement u_z or line load $q_x + \frac{\partial m_{xy}}{\partial y}$.

Impose rotation $-\frac{\partial u_z}{\partial x}$ or line moment m_{xx}.

Answer to problem 7

Page 64, figure 94; in the fixed edge a negative torsion moment occurs (grey area).