Delft University of Technology
Faculty of Civil Engineering and Geosciences
Structural Mechanics Section

Write your name and study number at the top right-hand of your work.

Exam CIE4143 Shell Analysis
Monday 27 June 2016, 13:30 – 16:30 hours

Problem 1 (30 minutes) 1.7 points

Explain shortly the meaning of the following eight words in relation to shells structures.

Theorema egregium
Loof node
Thick shell
Bernoulli's hypothesis
CNIT
Differential equation
Gaussian curvature
Moore's law

Problem 2 (30 minutes) 1.7 points

a Figure 1 shows a part of a shell and edge beam. Draw in this figure the shell loading, the shell membrane forces and the shell moments in the positive directions. (You can hand in this page with your answers.)

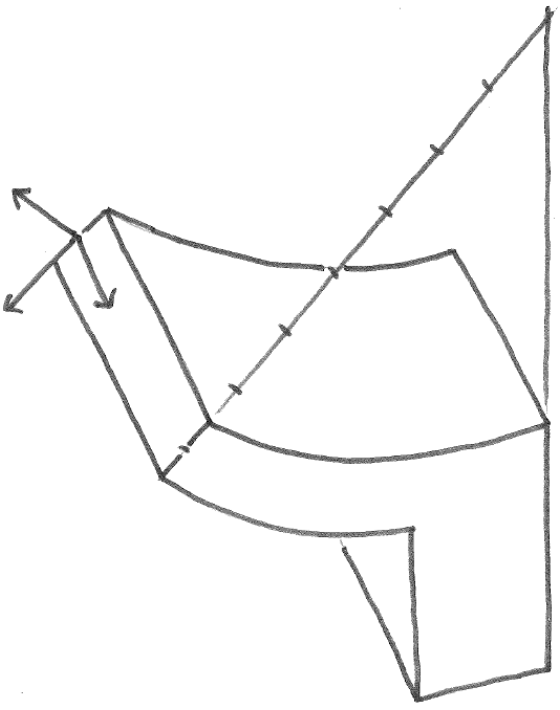

Figure 1. Part of shell and edge beam

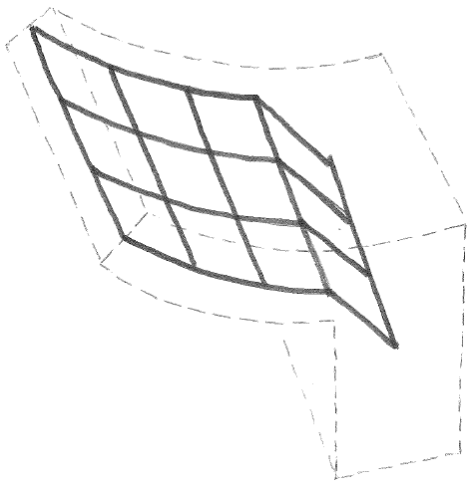

Figure 2. Finite element model of the shell part

b Figure 2 shows a finite element model of the shell part in figure 1. Write in this figure the names of the parts of the finite element model. Make clear which name belongs to which part.

c Are the shown dimensions of the shell elements too large, too small or just right? Assume that the edge beam is straight with a length of $20t$. Explain your answer.

d What elements should be used in this finite element model, Kirchhoff elements or Mindlin-Reissner elements? Explain your answer.

Problem 3 (30 minutes) 1.7 points

Consider the derivation below. It is valid for a thick shell part. Draw figures that explain equation 1 and equation 2.

$$\left.\begin{aligned} \sigma_{xy} &= \tfrac{1}{2}(\sigma_{xy}^{+} + \sigma_{xy}^{-}) + \frac{z}{t}(\sigma_{xy}^{+} - \sigma_{xy}^{-}) \quad (1) \\ n_{xy} &= \int_{z=-t/2}^{t/2} \sigma_{xy}(1 - zk_{yy})dz \quad (2) \\ n_{yx} &= \int_{z=-t/2}^{t/2} \sigma_{xy}(1 - zk_{xx})dz \quad (3) \end{aligned}\right\} \Rightarrow \begin{aligned} \sigma_{xy}^{+} &= \frac{n_{xy} + n_{yx}}{2t} + \frac{12 + k_{xx}t + k_{yy}t}{k_{xx}t - k_{yy}t}\,\frac{n_{xy} - n_{yx}}{2t} \quad (4) \\ \sigma_{xy}^{-} &= \frac{n_{xy} + n_{yx}}{2t} + \frac{-12 + k_{xx}t + k_{yy}t}{k_{xx}t - k_{yy}t}\,\frac{n_{xy} - n_{yx}}{2t} \quad (5) \end{aligned}$$

Problem 4 (15 minutes) 0.8 points

Figure 3 shows a cross-section of Saint Paul's cathedral. Draw in the figure how the weight of the lantern flows to the foundation. (You can hand in this page with your answers.)

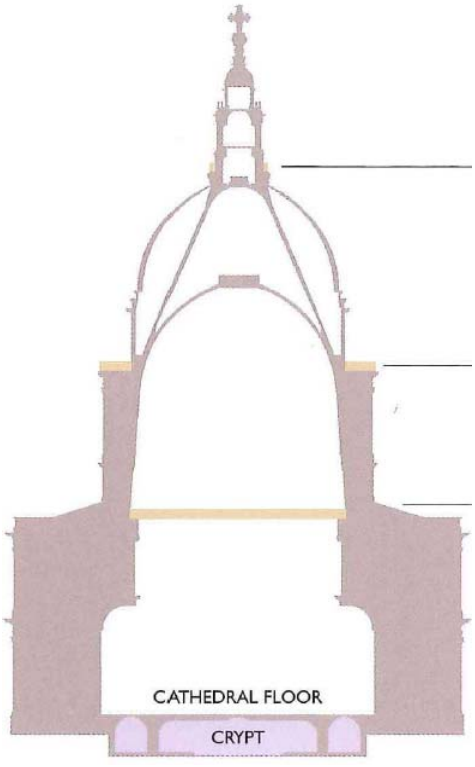

Figure 3. Cross-section of Saint Paul's cathedral

Problem 5 (30 minutes) 1.7 points

Consider a glass dome covering a small city.

Young's modulus	E = 60 000	N/mm²
specific mass	ρ = 2500	kg/m³
strength	f = 30	N/mm²
span	l = 1000	m
gravitational acceleration Earth	g_E = 9.8	m/s²
gravitational acceleration Moon	g_M = 1.6	m/s²
atmospheric pressure Earth	p_E = 0.1013	N/mm²
atmospheric pressure Moon	p_M = 0	N/mm²

Do not include safety factors. Explain your answers.

a What sagitta is optimal?

b What thickness is needed on Earth?

c What thickness is needed on the Moon?

d Can the Moon dome be pressurised with Earth atmosphere? Explain your answer.

Problem 6 (30 minutes) 1.7 point

Give the shell boundary conditions for an edge in the y direction and the x axis pointing inwards (Fig. 4, Fig. 5).

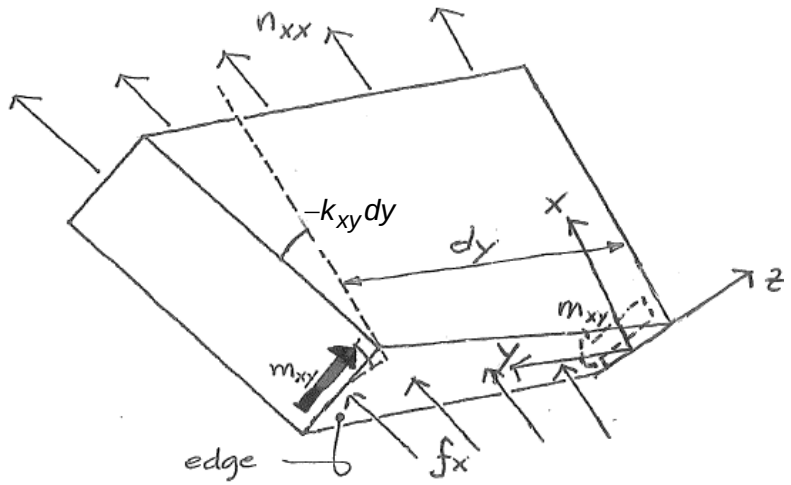

Figure 4. Equilibrium of a shell edge loaded by a distributed normal force f_x

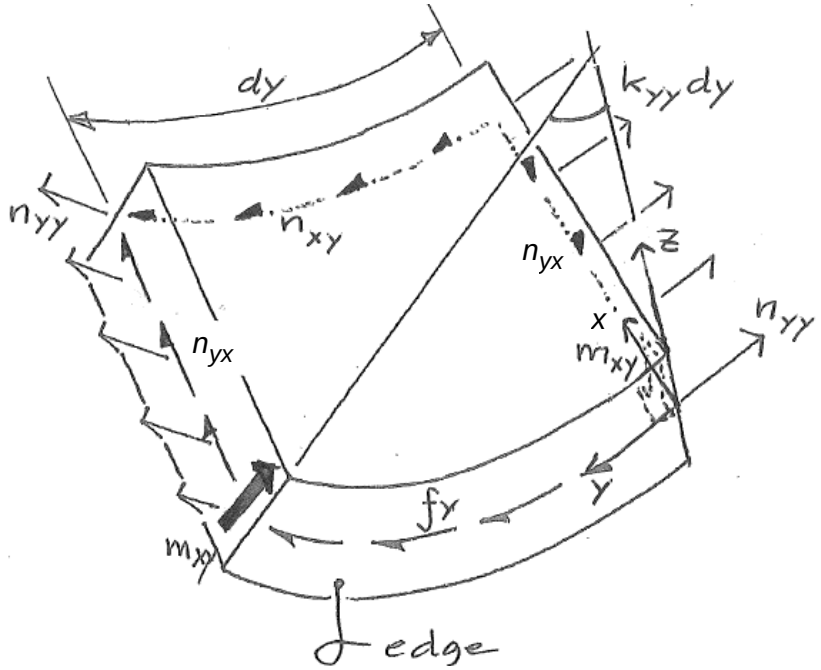

Figure 5. Equilibrium of a shell edge loaded by a distributed shear force f_y

Problem 7 (15 minutes) 0.7 point

In a badly designed shell most of the load is carried by bending moments and not by normal forces. Often this is called in-extensional deformation. However, often the middle surface of a shell is extended significantly and still some of the load is carried mostly by bending moments and not by normal forces. In those cases, looking for no extension does not reveal the problem. Therefore, the word “in-extensional deformation” is not correct. A more accurate description of the problem is that the deformation is such that the Gaussian curvature does not change. Propose a better word for this phenomenon.

Answers to problem 1

Theorema egregium ……..	When the deformation is in-extensional the Gaussian curvature does not change.
Loof node ……..	Point at the edge of a semiloof element with a rotational degree of freedom
Thick shell ……..	$5 < a / t < 30$
Bernoulli's hypothesis ……..	Plane sections remain plane during bending.
CNIT ……..	Largest shell in the world, Paris, La Défense
Differential equation ……..	Equation which contains derivatives
Gaussian curvature ……..	Product of the principal curvatures of a surface
Moore's law ……..	Computation power doubles every two years.

Answers to problem 2

a

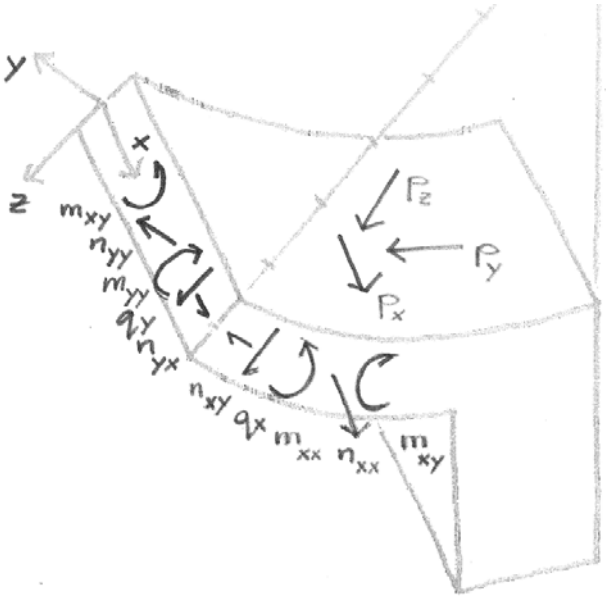

b

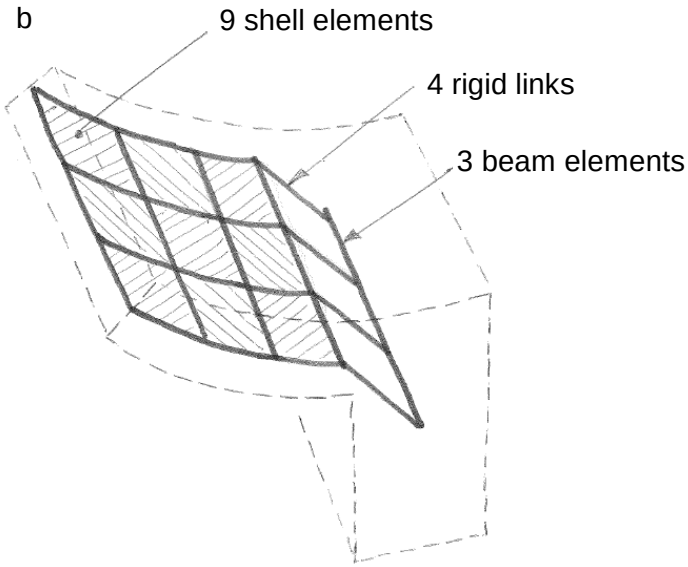

c The influence length of the shell edge is $l_i = 3.4\sqrt[4]{a\,t\,l^2} = 3.4\sqrt[4]{7t\,t\,(20t)^2} = 25t$. At least 6 elements are needed in the influence length. Therefore, the advised element size $h = 25t / 6 = 4t$ in the direction perpendicular to the edge. This is approximately 4 times larger than drawn. Therefore, the elements could be larger. However, if the number of elements is not a problem than better leave it as it is.

d Mindlin-Reissner elements because it is a thick shell ($a / t = 7$) and shear deformation can be important.

Answers to problem 3

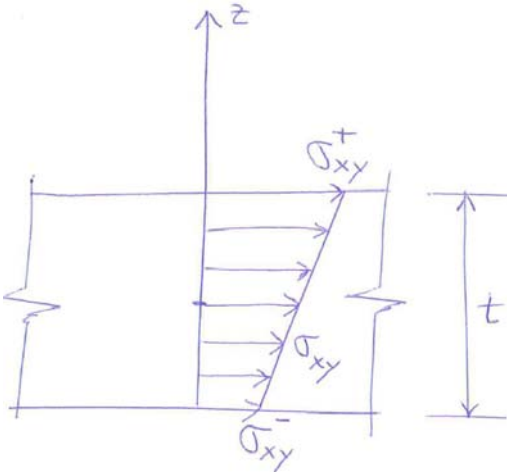

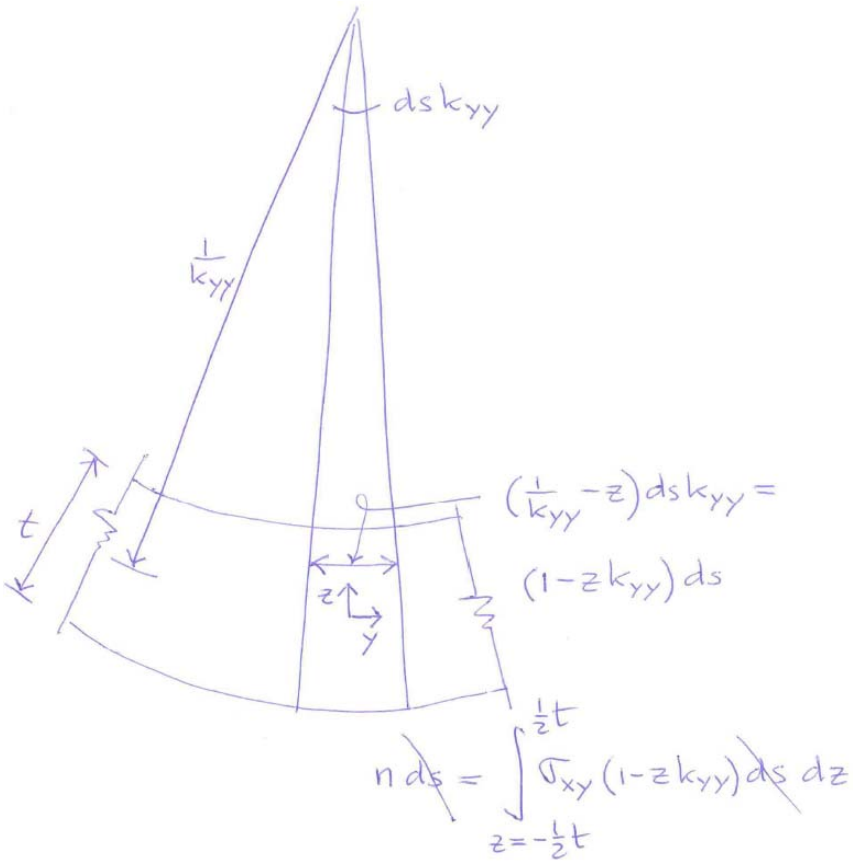

Answers to problem 4

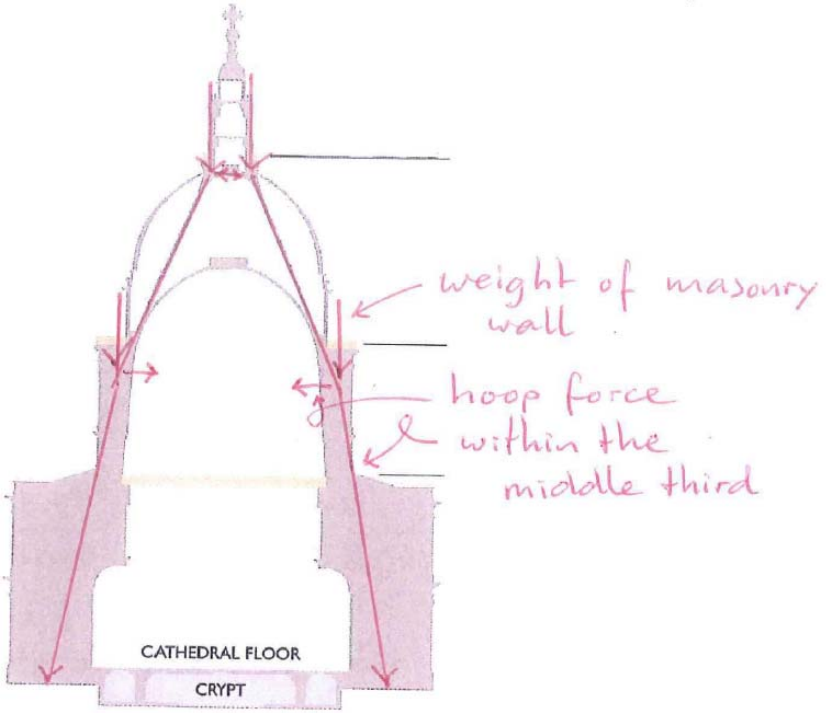

Answer to problem 5

a 30% of the span; s = 300 m.

b optimal dome $t = \frac{2}{9}10\frac{\rho g_E l^2}{E} = 907$ mm

c $t = \frac{2}{9}10\frac{\rho g_M l^2}{E} = 148$ mm

d $a = \frac{1}{2}s + \frac{1}{8}\frac{l^2}{s} = 577 \text{ m}$

Due to air pressure $n = \frac{1}{2}p_E a = 29226 \text{ N/mm}$ (Barlow's formula) $\sigma = \frac{n}{t} = 197 \text{ N/mm}^2$

Due to gravity $n = \frac{1}{2}\rho g_M t a = 171 \text{ N/mm}$ (in the dome top) $\sigma = \frac{n}{t} = -1.2 \text{ N/mm}^2$

The stresses due to air pressure is much larger than glass can resist. Therefore, the dome cannot be pressurised. (This can be solved by increasing the thickness.)

Answer to problem 6

Impose displacement u_x or line load $-n_{xx} + k_{xy}m_{xy}$.

Impose displacement u_y or line load $-n_{xy} + k_{yy}m_{xy}$.

Impose displacement u_z or line load $-q_x - \frac{\partial m_{xy}}{\partial y}$.

Impose rotation $-\frac{\partial u_z}{\partial x}$ or line moment $-m_{xx}$.

Answer to problem 7

Any reasonable answer was rewarded with 0.7 points. 33 Different words were proposed including “Gaussian deformation” and “Egregium deformation”. The best word – in my opinion – is “plate behaviour” by Steven Janssens.